## Not Recommended for New Designs

This product was manufactured for Maxim by an outside wafer foundry using a process that is no longer available. It is not recommended for new designs. The data sheet remains available for existing users.

A Maxim replacement or an industry second-source may be available. Please see the QuickView data sheet for this part or contact technical support for assistance.

For further information, contact Maxim's Applications Tech Support.

19-0418; Rev 1; 8/95

MAXIM

# Low Offset Voltage Operational Amplifier

OP07

## General Description

The OP07 is a precision operational amplifier with very low input offset voltage (10μV typ., 25μV max. for the OP07A), input offset drift of 0.2μV/°C and low input bias current of 0.7nA. The wide input common mode range of ±14V combined with high CMRR of 110dB minimum (OP07A), plus high input impedance and high open-loop gain make these devices particularly useful for high-gain instrumentation applications.

The excellent linearity and gain accuracy are maintained at high open-loop gains, over both time and temperature. The OP07 has become an industry standard and Maxim's reliability and quality are added advantages.

## Applications

Precision Amplifiers
Thermocouple Amplifiers
Low Level Signal Processing
Medical Instrumentation
Strain Gauge Amplifiers
High Accuracy Data Acquisition

## Pin Configuration

Top View

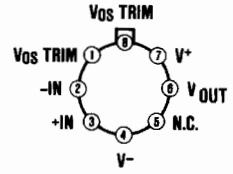


8 Lead TO-99

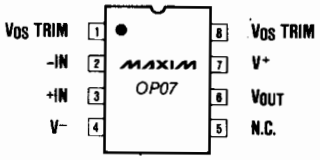


8 Lead Dip

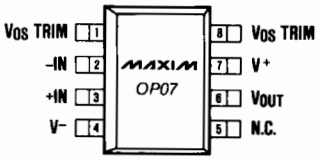


8 Lead Small Outline

## Features

- ◆ **Ultra Low Offset Voltage: 10μV**
- ◆ **Ultra Low Offset Voltage Drift: 0.2μV/°C**
- ◆ **Ultra Stable vs. Time: 0.2μV/Month**
- ◆ **Ultra Low Noise: 0.35$\mu V_{p-p}$**
- ◆ **Wide Supply Voltage: ±3V to ±18V**
- ◆ **High Common Mode Input: ±14V**
- ◆ **No External Components Required**
- ◆ **Fits AD510, 725, 108A/308A, 741 Sockets**

## Ordering Information

| PART | TEMP. RANGE | PACKAGE |
|---|---|---|
| OP07AJ | -55°C to +125°C | TO-99 |
| OP07J | -55°C to +125°C | TO-99 |
| OP07EJ | 0°C to +70°C | TO-99 |
| OP07CJ | 0°C to +70°C | TO-99 |
| OP07DJ | 0°C to +70°C | TO-99 |
| OP07EP | 0°C to +70°C | 8 Lead Plastic Dip |
| OP07CP | 0°C to +70°C | 8 Lead Plastic Dip |
| OP07DP | 0°C to +70°C | 8 Lead Plastic Dip |
| OP07AZ | -55°C to +125°C | 8 Lead Hermetic Dip |
| OP07Z | -55°C to +125°C | 8 Lead Hermetic Dip |
| OP07EZ | 0°C to +70°C | 8 Lead Hermetic Dip |
| OP07CZ | 0°C to +70°C | 8 Lead Hermetic Dip |
| OP07ECSA | 0°C to +70°C | 8 Lead Small Outline |
| OP07CCSA | 0°C to +70°C | 8 Lead Small Outline |
| OP07DCSA | 0°C to +70°C | 8 Lead Small Outline |
| OP07D/D | 0°C to +70°C | Dice |

** Contact factory for dice specifications.*

## Typical Operating Circuit

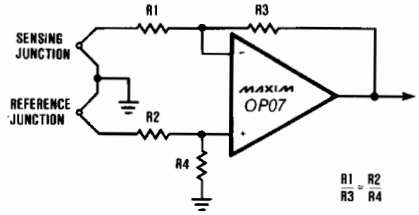


High-Stability
Thermocouple Amplifier



**Call toll free 1-800-998-8800 for free samples or literature.**

# Low Offset Voltage Operational Amplifier

## ABSOLUTE MAXIMUM RATINGS

Total Supply Voltage ($V^+$ to $V^-$) ..... ±22V
Internal Power Dissipation ..... 500mW
TO-99(J) — derate at 7.1mW/°C above +80°C
Hermetic Dip(Z) — derate at 6.7mW/°C above +75°C
Plastic Dip(P) — derate at 5.6mW/°C above +36°C
Small Outline — derate at 5mW/°C above +55°C
Differential Input Voltage ..... ±30V
Input Voltage (Note 1) ..... ±22V

Storage Temperature Range ..... -65°C to +150°C
Operating Temperature Range
OP07AJ, OP07AZ, OP07J and OP07Z ..... -55°C to +125°C
All Other Parts ..... 0°C to +70°C
Lead Temperature (Soldering, 10 sec) ..... +300°C
Duration of Output Short Circuit ..... Indefinite
Junction Temperature ($T_J$) ..... -65°C to +160°C

**Note 1:** For supply voltages less than ±22V, the absolute maximum input voltage is equal to the supply voltage.

*Stresses above those listed under "Absolute Maximum Ratings" may cause permanent damage to the device. These are stress ratings only and functional operation of the device at these or any other conditions above those indicated in the operational sections of the specifications is not implied. Exposure to absolute maximum rating conditions for extended periods may affect device reliability.*

## ELECTRICAL CHARACTERISTICS

($V_S$ = ±15V, $T_A$ = +25°C, unless otherwise noted.)

| PARAMETER | SYMBOL | CONDITIONS | OP07A | | | OP07 | | | UNITS |
|---|---|---|---|---|---|---|---|---|---|
| | | | MIN | TYP | MAX | MIN | TYP | MAX | |
| Input Offset Voltage | $V_{OS}$ | (Note 2) | | 10 | 25 | | 30 | 75 | µV |
| Long Term Input Offset Voltage Stability | $V_{OS}$/Time | (Note 3) | | 0.2 | 1.0 | | 0.2 | 1.0 | µV/ Month |
| Input Offset Current | $I_{OS}$ | | | 0.3 | 2.0 | | 0.4 | 2.8 | nA |
| Input Bias Current | $I_B$ | | | ±0.7 | ±2.0 | | ±1.0 | ±3.0 | nA |
| Input Noise Voltage | $e_{N\,P-P}$ | 0.1Hz to 10Hz (Note 4) | | 0.35 | 0.6 | | 0.35 | 0.6 | $\mu V_{P-P}$ |
| Input Noise Voltage Density | $e_N$ | $f_O$ = 10Hz (Note 4)<br>$f_O$ = 100Hz (Note 4)<br>$f_O$ = 1000Hz (Note 4) | | 10.3<br>10.0<br>9.6 | 18.0<br>13.0<br>11.0 | | 10.3<br>10.0<br>9.6 | 18.0<br>13.0<br>11.0 | $nV/\sqrt{Hz}$ |
| Input Noise Current | $I_{N\,P-P}$ | 0.1Hz to 10Hz (Note 4) | | 14 | 30 | | 14 | 30 | $pA_{P-P}$ |
| Input Noise Current Density | $I_N$ | $f_O$ = 10Hz (Note 4)<br>$f_O$ = 100Hz (Note 4)<br>$f_O$ = 1000Hz (Note 4) | | 0.32<br>0.14<br>0.12 | 0.80<br>0.23<br>0.17 | | 0.32<br>0.14<br>0.12 | 0.80<br>0.23<br>0.17 | $pA/\sqrt{Hz}$ |
| Input Resistance Differential-Mode | $R_{IN}$ | (Note 5) | 30 | 80 | | 20 | 60 | | MΩ |
| Input Resistance Common-Mode | $R_{INCM}$ | | | 200 | | | 200 | | GΩ |
| Input Voltage Range | IVR | | ±13 | ±14 | | ±13 | ±14 | | V |
| Common-Mode Rejection Ratio | CMRR | $V_{CM}$ = ±13V | 110 | 126 | | 110 | 126 | | dB |
| Power Supply Rejection Ratio | PSRR | $V_S$ = ±3V to ±18V | | 4 | 10 | | 4 | 10 | µV/V |
| Large Signal Voltage Gain | $A_{VO}$ | $R_L \geq 2k\Omega$, $V_O$ = ±10V<br>$R_L \geq 500\Omega$, $V_O$ = ±0.5V<br>$V_S$ = ±3V (Note 5) | 300<br>150 | 500<br>400 | | 200<br>150 | 500<br>400 | | V/mV |
| Output Voltage Swing | $V_O$ | $R_L \geq 10k\Omega$<br>$R_L \geq 2k\Omega$<br>$R_L \geq 1k\Omega$ | ±12.5<br>±12.0<br>±10.5 | ±13.0<br>±12.8<br>±12.0 | | ±12.5<br>±12.0<br>±10.5 | ±13.0<br>±12.8<br>±12.0 | | V |

**Note 2:** OP07A grade $V_{OS}$ is measured one minute after application of power. For all other grades $V_{OS}$ is measured approximately 0.5 seconds after application of power.
**Note 3:** Long-Term Input Offset Voltage Stability refers to the average trend line of $V_{OS}$ vs. Time over extended periods after the first 30 days of operation. Excluding the initial hour of operation, changes in $V_{OS}$ during the first 30 operating days are typically 2.5µV. Parameter is sample tested.
**Note 4:** Sample tested.
**Note 5:** Guaranteed by design.

## ELECTRICAL CHARACTERISTICS (continued)

($V_S$ = ±15V, $T_A$ = +25°C, unless otherwise noted.)

| PARAMETER | SYMBOL | CONDITIONS | OP07A | | | OP07 | | | UNITS |
|---|---|---|---|---|---|---|---|---|---|
| | | | MIN | TYP | MAX | MIN | TYP | MAX | |
| Slew Rate | SR | $R_L \geq 2k\Omega$ (Note 6) | 0.1 | 0.3 | | 0.1 | 0.3 | | V/μS |
| Closed-Loop Bandwidth | BW | $A_{VCL}$ = +1V (Note 6) | 0.4 | 0.6 | | 0.4 | 0.6 | | MHz |
| Open-Loop Output Resistance | $R_O$ | $V_O$ = 0V, $I_O$ = 0 | | 60 | | | 60 | | Ω |
| Power Consumption | $P_D$ | $V_S$ = ±15V, No Load<br>$V_S$ = ±3V, No Load | | 75<br>4 | 120<br>6 | | 75<br>4 | 120<br>6 | mW |
| Offset Adjustment Range | | $R_P$ = 20kΩ | | ±4 | | | ±4 | | mV |

**Note 6:** Sample tested.

## ELECTRICAL CHARACTERISTICS

($V_S$ = ±15V, -55°C ≤ $T_A$ ≤ +125°C, unless otherwise noted.)

| PARAMETER | SYMBOL | CONDITIONS | OP07A | | | OP07 | | | UNITS |
|---|---|---|---|---|---|---|---|---|---|
| | | | MIN | TYP | MAX | MIN | TYP | MAX | |
| Input Offset Voltage | $V_{OS}$ | (Note 7) | | 25 | 60 | | 60 | 200 | μV |
| Average Temperature Coefficient of Input Offset Voltage | $TCV_{OS}$ | (Note 8) | | 0.2 | 0.6 | | 0.3 | 1.3 | μV/°C |
| Input Offset Current | $I_{OS}$ | | | 0.8 | 4.0 | | 1.2 | 5.6 | nA |
| Average Input Offset Current Drift | $TCI_{OS}$ | (Note 8) | | 5 | 25 | | 8 | 50 | pA/°C |
| Input Bias Current | $I_B$ | | | ±1.0 | ±4.0 | | ±2.0 | ±6.0 | nA |
| Average Input Bias Current Drift | $TCI_B$ | (Note 8) | | 8 | 25 | | 13 | 50 | pA/°C |
| Input Voltage Range | IVR | | ±13 | ±13.5 | | ±13 | ±13.5 | | V |
| Common-Mode Rejection Ratio | CMRR | $V_{CM} = \pm 13V$ | 106 | 123 | | 106 | 123 | | dB |
| Power Supply Rejection Ratio | PSRR | $V_S$ = ±3V to ±18V | | 5 | 20 | | 5 | 20 | μV/V |
| Large Signal Voltage Gain | $A_{VO}$ | $R_L \geq 2k\Omega$, $V_O$ = ±10V | 200 | 400 | | 150 | 400 | | V/mV |
| Output Voltage Swing | $V_O$ | $R_L \geq 2k\Omega$ | ±12.0 | ±12.6 | | ±12.0 | ±12.6 | | V |

**Note 7:** OP07A grade Offset Voltage is measured one minute after application of power. For all other grades $V_{OS}$ is measured 0.5 seconds after power on.

**Note 8:** Sample tested.

# Low Offset Voltage Operational Amplifier

## ELECTRICAL CHARACTERISTICS

($V_S$ = ±15V, $T_A$ = +25°C, unless otherwise noted.)

| PARAMETER | SYMBOL | CONDITIONS | OP07E | | | OP07C | | | OP07D | | | |
|---|---|---|---|---|---|---|---|---|---|---|---|---|
| | | | MIN. | TYP. | MAX. | MIN. | TYP. | MAX. | MIN. | TYP. | MAX. | |
| Input Offset Voltage | $V_{OS}$ | (Note 1) | | 30 | 75 | | 60 | 150 | | 60 | 150 | µV |
| Long Term Input Offset Voltage Stability | $V_{OS}$/Time | (Note 2) | | 0.3 | 1.5 | | 0.4 | 2.0 | | 0.5 | 3.0 | µV/ Month |
| Input Offset Current | $I_{OS}$ | | | 0.5 | 3.8 | | 0.8 | 6.0 | | 0.8 | 6.0 | nA |
| Input Bias Current | $I_B$ | | | ±1.2 | ±4.0 | | ±1.8 | ±7.0 | | ±2.0 | ±12.0 | nA |
| Input Noise Voltage | $e_{N\ P-P}$ | 0.1Hz to 10Hz (Note 3) | | 0.35 | 0.6 | | 0.38 | 0.65 | | 0.38 | 0.65 | $\mu V_{P-P}$ |
| Input Noise Voltage Density | $e_N$ | $f_O$ = 10Hz (Note 3)<br>$f_O$ = 100Hz (Note 3)<br>$f_O$ = 1000Hz (Note 3) | | 10.3<br>10.0<br>9.6 | 18.0<br>13.0<br>11.0 | | 10.5<br>10.2<br>9.8 | 20.0<br>13.5<br>11.5 | | 10.5<br>10.3<br>9.8 | 20.0<br>13.5<br>11.5 | nV/√Hz |
| Input Noise Current | $I_{N\ P-P}$ | 0.1Hz to 10Hz (Note 3) | | 14 | 30 | | 15 | 35 | | 15 | 35 | $pA_{P-P}$ |
| Input Noise Current Density | $I_N$ | $f_O$ = 10Hz (Note 3)<br>$f_O$ = 100Hz (Note 3)<br>$f_O$ = 1000Hz (Note 3) | | 0.32<br>0.14<br>0.12 | 0.80<br>0.23<br>0.17 | | 0.35<br>0.15<br>0.13 | 0.90<br>0.27<br>0.18 | | 0.35<br>0.15<br>0.13 | 0.90<br>0.27<br>0.18 | pA/√Hz |
| Input Resistance Differential-Mode | $R_{IN}$ | (Note 4) | 15 | 50 | | 8 | 33 | | 7 | 31 | | MΩ |
| Input Resistance Common-Mode | $R_{INCM}$ | | | 160 | | | 120 | | | 120 | | GΩ |
| Input Voltage Range | IVR | | ±13 | ±14 | | ±13 | ±14 | | ±13 | ±14 | | V |
| Common-Mode Rejection Ratio | CMRR | $V_{CM}$ = ±13V | 106 | 123 | | 100 | 120 | | 94 | 110 | | dB |
| Power Supply Rejection Ratio | PSRR | $V_S$ = ±3V to ±18V | | 5 | 20 | | 7 | 32 | | 7 | 32 | µV/V |
| Large Signal Voltage Gain | $A_{VO}$ | $R_L$ ≥ 2kΩ, $V_O$ = ±10V<br>$R_L$ ≥ 500Ω, $V_O$ = ±0.5V<br>$V_S$ = ±3V (Note 5) | 200<br>150 | 500<br>400 | | 120<br>100 | 400<br>400 | | 120 | 400<br>400 | | V/mV |
| Output Voltage Swing | $V_O$ | $R_L$ ≥ 10kΩ<br>$R_L$ ≥ 2kΩ<br>$R_L$ ≥ 1kΩ | ±12.5<br>±12.0<br>±10.5 | ±13.0<br>±12.8<br>±12.0 | | ±12.0<br>±11.5 | ±13.0<br>±12.8<br>±12.0 | | ±12.0<br>±11.5 | ±13.0<br>±12.8<br>±12.0 | | V |
| Slew Rate | SR | $R_L$ ≥ 2kΩ (Note 3) | 0.1 | 0.3 | | 0.1 | 0.3 | | 0.1 | 0.3 | | V/µS |
| Closed-Loop Bandwidth | BW | $A_{VCL}$ = +1V (Note 3) | 0.4 | 0.6 | | 0.4 | 0.6 | | 0.4 | 0.6 | | MHz |
| Open-Loop Output Resistance | $R_O$ | $V_O$ = 0V, $I_O$ = 0 | | 60 | | | 60 | | | 60 | | Ω |
| Power Consumption | Pd | $V_S$ = ±15V, No Load<br>$V_S$ = ±3V, No Load | | 75<br>4 | 120<br>6 | | 80<br>4 | 150<br>8 | | 80<br>4 | 150<br>8 | mW |
| Offset Adjustment Range | | $R_P$ = 20kΩ | | ±4 | | | ±4 | | | ±4 | | mV |

**Note 1:** Input Offset Voltage measurements are performed by automated test equipment approximately 0.5 seconds after application of power.

**Note 2.** Long-Term Input Offset Stability refers to the average trend line of $V_{OS}$ vs Time over extended periods after the first 30 days of operation.

**Note 3.** Sample tested.

**Note 4.** Guaranteed by design.

## ELECTRICAL CHARACTERISTICS

($V_S$ = ±15V, 0°C ≤ $T_A$ ≤ +70°C, unless otherwise noted.)

| PARAMETER | SYMBOL | CONDITIONS | OP07E | | | OP07C | | | OP07D | | | |
|---|---|---|---|---|---|---|---|---|---|---|---|---|
| | | | MIN. | TYP. | MAX. | MIN. | TYP. | MAX. | MIN. | TYP. | MAX. | |
| Input Offset Voltage | $V_{OS}$ | (Note 5) | | 45 | 130 | | 85 | 250 | | 85 | 250 | µV |
| Average Temperature Coefficient of Input Offset Voltage | $TCV_{OS}$ | (Note 6) | | 0.3 | 1.3 | | 0.4 | 1.8 | | 0.7 | 2.5 | µV/°C |
| Input Offset Current | $I_{OS}$ | | | 0.9 | 5.3 | | 1.6 | 8.0 | | 1.6 | 8.0 | nA |
| Average Input Offset Current Drift | $TCI_{OS}$ | (Note 6) | | 8 | 35 | | 12 | 50 | | 12 | 50 | pA/°C |
| Input Bias Current | $I_B$ | | | ±1.5 | ±5.5 | | ±2.2 | ±9.0 | | ±3.0 | ±14 | nA |
| Average Input Bias Current Drift | $TCI_B$ | (Note 6) | | 13 | 35 | | 18 | 50 | | 18 | 50 | pA/°C |
| Input Voltage Range | IVR | | ±13.0 | ±13.5 | | ±13.0 | ±13.5 | | ±13.0 | ±13.5 | | V |
| Common-Mode Rejection Ratio | CMRR | $V_{CM}$ = ±13V | 103 | 123 | | 97 | 120 | | 94 | 106 | | dB |
| Power Supply Rejection Ratio | PSRR | $V_S$ = ±3V to ±18V | | 7 | 32 | | 10 | 51 | | 10 | 51 | µV/V |
| Large Signal Voltage Gain | $A_{VO}$ | $R_L$ ≥ 2kΩ, $V_O$ = ±10V | 180 | 400 | | 100 | 400 | | 100 | 400 | | V/mV |
| Output Voltage Swing | $V_O$ | $R_L$ ≥ 2kΩ | ±12.0 | ±12.6 | | ±11.0 | ±12.6 | | ±11.0 | ±12.6 | | V |

**Note 5:** Input Offset Voltage is measured 0.5 seconds after application of power.
**Note 6:** Sample tested.

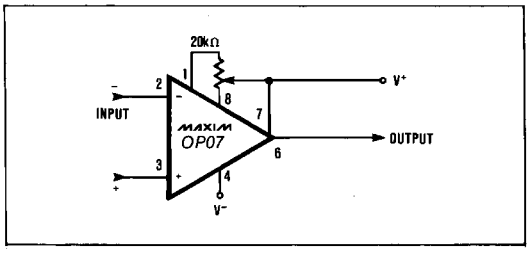


*Figure 1. Optional Offset Nulling Circuit.*

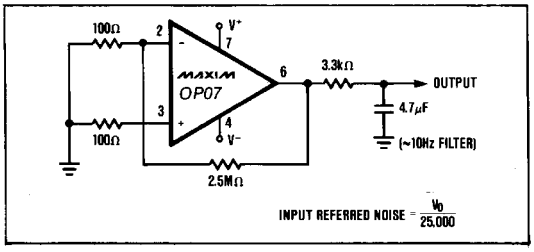


*Figure 2. Low Frequency Noise Test Circuit.*

**INPUT BIAS CURRENT vs. TEMPERATURE**

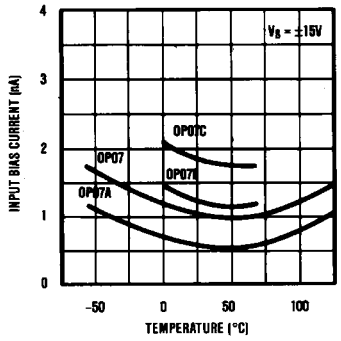


**INPUT OFFSET CURRENT vs. TEMPERATURE**

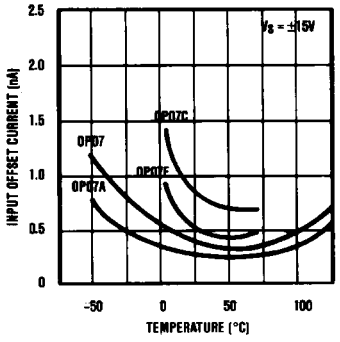


**INPUT BIAS CURRENT vs. DIFFERENTIAL INPUT VOLTAGE**

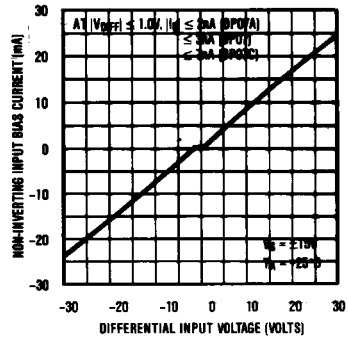

# Low Offset Voltage Operational Amplifier

MAXIMUM OUTPUT SWING vs. FREQUENCY

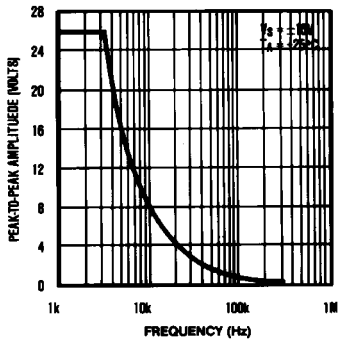


LOW FREQUENCY NOISE

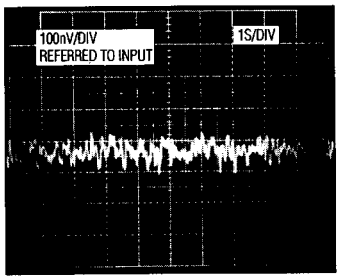


TOTAL INPUT NOISE VOLTAGE vs. FREQUENCY

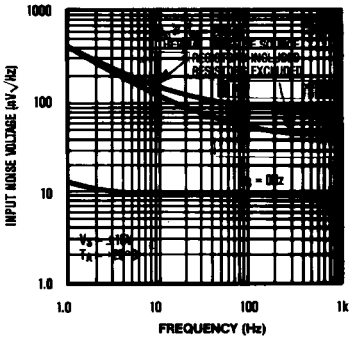


CMRR vs. FREQUENCY

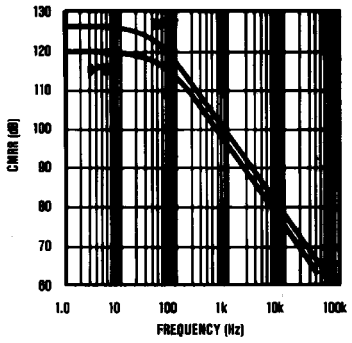


PSRR vs. FREQUENCY

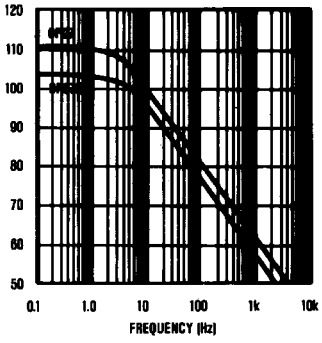


OPEN LOOP FREQUENCY RESPONSE

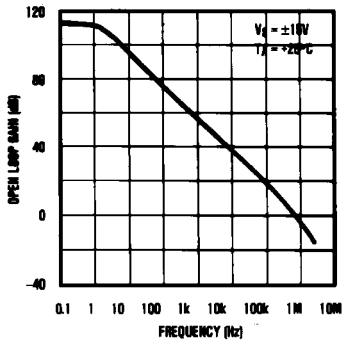


OFFSET VOLTAGE CHANGE DUE TO THERMAL SHOCK

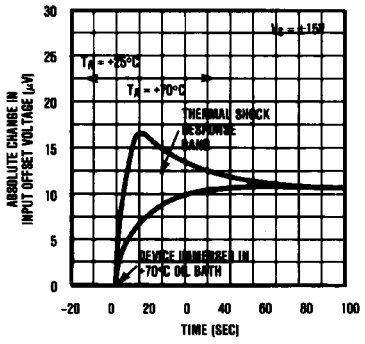


## Chip Topography

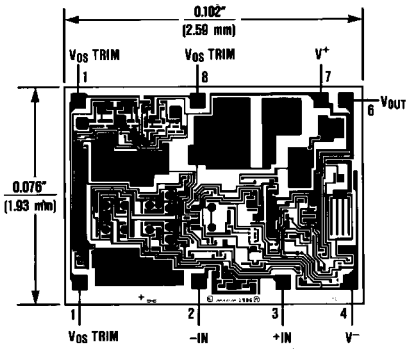

# Low Offset Voltage Operational Amplifier

## Package Information

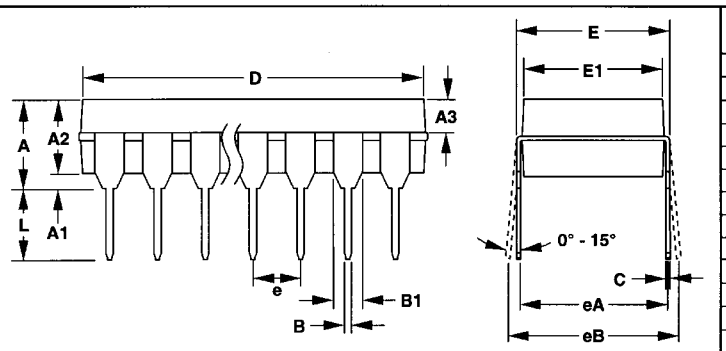


**Plastic DIP PLASTIC DUAL-IN-LINE PACKAGE (0.300 in.)**

| DIM | INCHES | | MILLIMETERS | |
|---|---|---|---|---|
| | MIN | MAX | MIN | MAX |
| A | – | 0.200 | – | 5.08 |
| A1 | 0.015 | – | 0.38 | – |
| A2 | 0.125 | 0.175 | 3.18 | 4.45 |
| A3 | 0.055 | 0.080 | 1.40 | 2.03 |
| B | 0.016 | 0.022 | 0.41 | 0.56 |
| B1 | 0.045 | 0.065 | 1.14 | 1.65 |
| C | 0.008 | 0.012 | 0.20 | 0.30 |
| D1 | 0.005 | 0.080 | 0.13 | 2.03 |
| E | 0.300 | 0.325 | 7.62 | 8.26 |
| E1 | 0.240 | 0.310 | 6.10 | 7.87 |
| e | 0.100 | – | 2.54 | – |
| eA | 0.300 | – | 7.62 | – |
| eB | – | 0.400 | – | 10.16 |
| L | 0.115 | 0.150 | 2.92 | 3.81 |

| PKG. | DIM | PINS | INCHES | | MILLIMETERS | |
|---|---|---|---|---|---|---|
| | | | MIN | MAX | MIN | MAX |
| P | D | 8 | 0.348 | 0.390 | 8.84 | 9.91 |
| P | D | 14 | 0.735 | 0.765 | 18.67 | 19.43 |
| P | D | 16 | 0.745 | 0.765 | 18.92 | 19.43 |
| P | D | 18 | 0.885 | 0.915 | 22.48 | 23.24 |
| P | D | 20 | 1.015 | 1.045 | 25.78 | 26.54 |
| N | D | 24 | 1.14 | 1.265 | 28.96 | 32.13 |

21-0043A

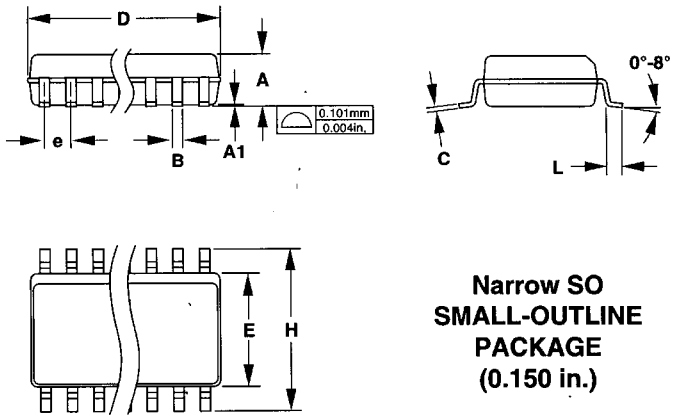


**Narrow SO SMALL-OUTLINE PACKAGE (0.150 in.)**

| DIM | INCHES | | MILLIMETERS | |
|---|---|---|---|---|
| | MIN | MAX | MIN | MAX |
| A | 0.053 | 0.069 | 1.35 | 1.75 |
| A1 | 0.004 | 0.010 | 0.10 | 0.25 |
| B | 0.014 | 0.019 | 0.35 | 0.49 |
| C | 0.007 | 0.010 | 0.19 | 0.25 |
| E | 0.150 | 0.157 | 3.80 | 4.00 |
| e | 0.050 | | 1.27 | |
| H | 0.228 | 0.244 | 5.80 | 6.20 |
| L | 0.016 | 0.050 | 0.40 | 1.27 |

| DIM | PINS | INCHES | | MILLIMETERS | |
|---|---|---|---|---|---|
| | | MIN | MAX | MIN | MAX |
| D | 8 | 0.189 | 0.197 | 4.80 | 5.00 |
| D | 14 | 0.337 | 0.344 | 8.55 | 8.75 |
| D | 16 | 0.386 | 0.394 | 9.80 | 10.00 |

21-0041A

# Low Offset Voltage Operational Amplifier

## Package Information (continued)

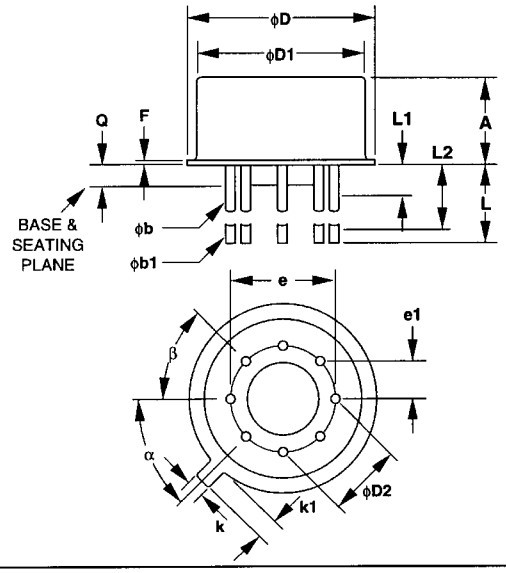


| DIM | INCHES | | MILLIMETERS | |
|---|---|---|---|---|
| | MIN | MAX | MIN | MAX |
| A | 0.165 | 0.185 | 4.19 | 4.70 |
| φb | 0.016 | 0.019 | 0.41 | 0.48 |
| φb1 | 0.016 | 0.021 | 0.41 | 0.53 |
| φD | 0.335 | 0.375 | 8.51 | 9.40 |
| φD1 | 0.305 | 0.335 | 7.75 | 8.51 |
| φD2 | 0.110 | 0.160 | 2.79 | 4.06 |
| e | 0.200 BSC | | 5.08 BSC | |
| e1 | 0.100 BSC | | 2.54 BSC | |
| F | – | 0.040 | – | 1.02 |
| k | 0.027 | 0.034 | 0.69 | 0.86 |
| k1 | 0.027 | 0.045 | 0.69 | 1.14 |
| L | 0.500 | 0.750 | 12.70 | 19.05 |
| L1 | – | 0.050 | – | 1.27 |
| L2 | 0.250 | – | 6.35 | – |
| Q | 0.010 | 0.045 | 0.25 | 1.14 |
| α | 45° BSC | | 45° BSC | |
| β | 45° BSC | | 45° BSC | |

21-0022A

**8-PIN TO-99 METAL CAN PACKAGE**

*Maxim cannot assume responsibility for use of any circuitry other than circuitry entirely embodied in a Maxim product. No circuit patent licenses are implied. Maxim reserves the right to change the circuitry and specifications without notice at any time.*



© 1995 Maxim Integrated Products Printed USA MAXIM is a registered trademark of Maxim Integrated Products.