MOTOROLA

TDA1185A

Triac Phase Angle Controller

The TDA1185A generates controlled triac triggering pulses and allows tachless speed stabilization of universal motors by an integrated positive feedback function. Typical applications are power hand tools, vacuum cleaners, mixers, light dimmer and other small appliances.

- Supply Power Obtained from AC Line
- Can be used with 220 V/50 Hz or 110 V/60 Hz
- Low Count/Cost External Components
- Optimum Triac Firing (2nd and 3rd Quadrants)
- Repetitive Trigger Pulses when Triac Current is Interrupted by Motor Brush Bounce
- Triac Current Sensing to Allow Inductive Loads
- Programmable Soft–Start
- Power Failure Detection and General Circuit Reset
- Low Power Consumption: 6.0 mA

TRIAC PHASE ANGLE CONTROLLER

SEMICONDUCTOR TECHNICAL DATA

4

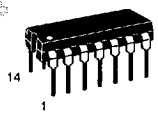

PLASTIC PACKAGE
CASE 646

Figure 1. Representative Block Diagram

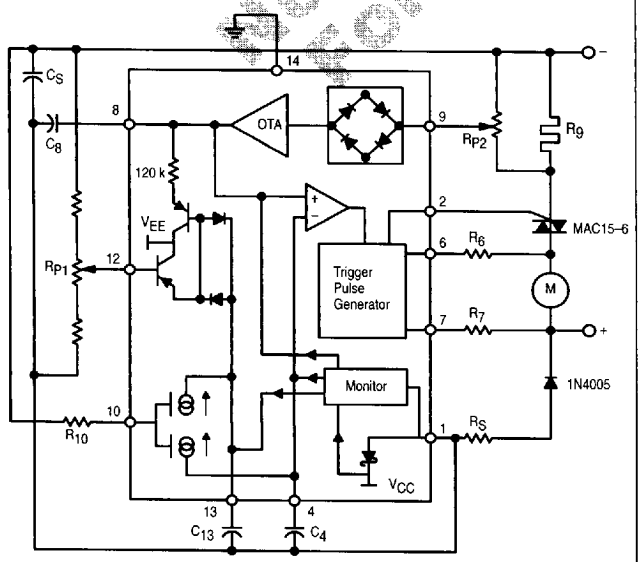

PIN CONNECTIONS

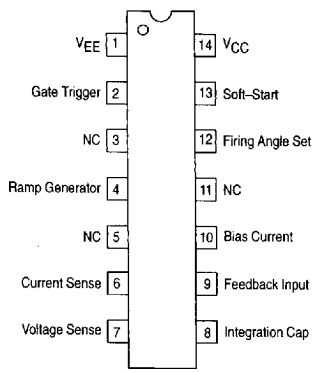

ORDERING INFORMATION

Device	Operating Temperature Range	Package
TDA1185A	T_A = 0° to +70°C	Plastic DIP

Not Recommended for New Designs

http://www.chipdocs.com

MAXIMUM RATINGS (Voltages are referenced to Pin 14, ground)

Rating	Symbol	Value	Unit
Maximum Voltage Range per Listed Pin	V_{Pin}		V
Pins 3, 5, 11 (not connected)		– 20 to + 20	
Pins 4, 8, 13		– V_{CC} to 0	
Pin 2		– 3.0 to + 3.0	
Maximum Positive Voltage (No minimum value allowed; see current ratings)	$V_{Pin\ 12}$ $V_{Pin\ 1}$	0 0.5	
Maximum Current per Listed Pin	I_{Pin}		
Pin 1		± 20	mA
Pins 6 and 7		± 2.0	mA
Pin 9		± 0.5	mA
Pin 10		± 300	µA
Pin 12		– 500	µA
Maximum Power Dissipation (@ T_A = 25°C)	P_D	250	mW
Maximum Thermal Resistance, Junction–to–Ambient	$R_{\theta JA}$	100	°C/W
Operating Ambient Temperature Range	T_A	0 to + 70	°C
Storage Temperature Range	T_{stg}	– 55 to + 125	°C

ELECTRICAL CHARACTERISTICS (T_A = 25°C, voltages are referenced to Pin 14 (ground) unless otherwise noted.)

Characteristics	Symbol	Min	Typ	Max	Unit
Power Supply					
Zener Regulated Voltage, ($V_{Pin\ 1}$) $I_{Pin\ 1}$ = 2.0 mA	V_{CC}	9.6	– 8.6	– 7.6	V
Circuit Current Consumption, $I_{Pin\ 1}$					
$V_{Pin\ 1}$ = – 6.0 V, $I_{Pin\ 2}$ = 0 A	– I_{CC}	– 2.0	– 1.0	—	mA
Monitoring Enable Supply Voltage (V_{EN})	$V_{Pin\ 1EN}$	V_{CC} + 0.2	—	V_{CC} + 0.5	V
Monitoring Disable Supply Voltage (V_{DIS})	$V_{Pin\ 1DIS}$	V_{EN} + 0.12	—	V_{EN} + 0.3	
Phase Set					
Control Voltage Static Offset $V_{Pin\ 8}$ – $V_{Pin\ 12}$	V_{off}	1.2	—	2.0	V
Pin 12 Input Bias Current	$I_{Pin\ 12}$	– 200	—	0	nA
$V_{Pin\ 4}$ – $V_{Pin\ 12}$ Residual Offset		—	180	—	mV
Soft–Start	$I_{Pin\ 13}$	– 17	– 14	– 11	µA
Capacitor Charging Current					
$R_{Pin\ 10}$ = 100 kΩ, $V_{Pin\ 13}$ from – V_{CC} to – 8.0 V					
Sawtooth Generator					
Sawtooth Capacitor Discharge Current					
R_{10} = 100 kΩ $V_{Pin\ 4}$ from – 2.0 to – 6.0 V	$I_{Pin\ 4}$	67	70	73	µA
Capacitor Charging Current	$I_{Pin\ 4}$	– 10	—	– 1.5	mA
Sawtooth "High" Voltage ($V_{Pin\ 4}$)	V_{HTH}	– 2.5	– 1.6	– 1.0	V
Sawtooth Minimum "Low" Voltage ($V_{Pin\ 4}$)	V_{LTH}	—	– 7.1	—	V
Positive Feedback					
Pin 9 Input Bias Current, $V_{Pin\ 9}$ = 0	$I_{Pin\ 9}$	—	2 x $I_{Pin\ 10}$	—	
Programming Pin Voltage Related to Pin 1	$V_{Pin\ 10}$	1.0	1.25	1.5	V
Transfer Function Gain $\Delta V_{Pin\ 8}/\Delta V_{Pin\ 9}$					
R_{10} = 100 kΩ, $\Delta V_{Pin\ 9}$ = 50 mV	A	—	75	—	
R_{10} = 270 kΩ, $\Delta V_{Pin\ 9}$ = 50 mV	A	—	36	—	
Pin 8 Output Internal Impedance	$Z_{Pin\ 8}$	—	120	—	kΩ
Trigger Pulse Generator					
Output Current (Sink) $V_{Pin\ 2}$ = 0 V	$I_{Pin\ 2}$	60	—	80	mA
Output Leakage Current $V_{Pin\ 2}$ = + 2.0 V		—	—	4.0	µA
Output Pulse Width	t_P				
C_4 = 47 nF R_{10} = 270 kΩ		—	55	—	µs
Output Pulse Repetition Period	t				
C_4 = 47 nF R_{10} = 270 kΩ		—	420	—	µs
Current Synchronization Threshold Levels $I_{Pin\ 6}$, $I_{Pin\ 7}$	I_{sync}	– 40	—	+ 40	µA

Not Recommended For New Designs

http://www.chipdocs.com

PIN FUNCTION DESCRIPTION

Pin No.	Function	Description
1	V_{EE}	This pin is the negative supply for the chip and is clamped at – 8.6 V by an internal zener.
2	Gate Trigger Pulse	This pin supplies – 1.0 V triac trigger pulse at twice the line frequency.
3	NC	Not connected.
4	Ramp Generator	The value of the capacitor at this pin determines the slope of the ramp.
5	NC	Not connected.
6	Current Sense	This pin senses if the triac is on, and if so, will disable the gate trigger pulse.
7	Voltage Sense	The internal timing of the chip is set by the frequency of the voltage at this pin.
8	Integration Capacitor	This pin is the output of the feedback and the variation in voltage is averaged out by the capacitor.
9	Feedback Input	The change in load current is detected by the change in voltage across R9.
10	Current Program	The bias current for the circuit is determined by the resistor value at this pin.
11	NC	Not connected.
12	Phase Angle Set	The voltage at this pin sets the no–load firing angle.
13	Soft–Start	The firing angle is slowly increased from 180° to the set value of Pin 12.
14	V_{CC}	Ground

4

Introduction

The Motorola TDA1185A generates trigger pulses (Pin 2) for triac control of power into an AC load. The triac trigger pulse is determined by generating a ramp voltage (Pin 4) synchronized to twice the AC line frequency and compared to an external set voltage (Pin 12) representing the conduction angle. Gate pulses are negative (sink current) and thus the triac is driven into its most effective quadrants (Q2 to Q3).

If the load is a Universal motor (the speed of which decreases as torque increases), the TDA1185A allows to increase the conduction angle proportionally to the motor current, sensed (Pin 9) by a low value resistor in series with the load.

FUNCTIONAL DESCRIPTION

DC Power Supply

DC power is directly derived from the AC line through a 2.0 W resistor, half–wave rectifier and filtering capacitor circuit. The V_{EE} voltage is internally regulated by an integrated zener. Referenced to ground (Pin 14), the power supply voltage is – 8.6 V. The TDA1185A internal consumption is 6.0 mA.

Trigger Pulse Generator

It delivers a 60 mA minimum sink current pulse (Pin 2) through an internally short circuit protected output. Pulse width is roughly proportional to $R_{10} \times C_4$ and is repeated every 420 µs if triac fails to latch or is switched off by brush bounce. With inductive loads, the current lags in respect to the voltage. Pin 6 delays the triggering pulse up to the moment the triac is off, in order to prevent erratic power control (see Figure 2).

Figure 2. Multipulse Generation Delayed Pulse

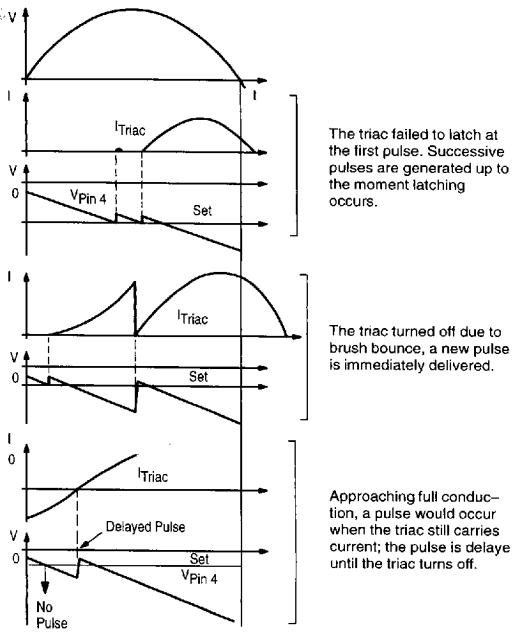

http://www.chipdocs.com

Ramp Generator

A constant current sink discharges capacitor C_4 producing a negative voltage ramp synchronized with the main line. Pin 4 voltage is reset to – 1.6 V at every AC line zero crossing (see Figure 3) and ramps down to – 7.1 V. The constant current sink is externally programmable by R_{10} using the equation below.

$$I_4 = I_{10} \pm 5\%$$

$$I_{10} = \frac{|V_{EE} + 1.25|}{R_{10}}$$

Main Comparator

Its role is to determine the trigger pulse which occurs when the ramp voltage equals the phase angle set voltage at Pin 12. Fixed phase angle set voltage values lead to a constant TRIAC conduction angle unless positive current feedback (Pin 9) is connected or the Soft–Start capacitor (Pin 13) is not charged.

Soft–Start

The TDA1185A allows the user to avoid any abrupt inrush of current into the load. This provides protection for fragile loads, light bulbs or tubes. Another advantage is that the AC line disturbance is minimized.

The conduction angle is established from zero to the set value at Pin 12 according to a voltage ramp generated by a constant current delivered to C_{13}. The value of current I_{13} can be expressed by the following equation:

$$I_{13} = 0.2 \times I_{10} \pm 10\%$$

The voltage ramp lasts as long as V_{13} is lower than the set voltage V_{12}. Upon reset, V_{13} is forced to V_{EE} as shown in Figure 4. If the load is a universal motor, it will not turn until a minimum conduction angle is achieved to overcome friction. The time the voltage ramp requires to reach its threshold value is considered deadtime, and can be eliminated by an appropriate series resistor at Pin 13. The voltage drop developed by I_{13} thru the resistor causes the conduction angle to immediately reach the threshold value and have the Soft–Start function without dead time (see Figure 5).

Not Recommended for New Designs

Figure 3. Triggering Pulse Timing

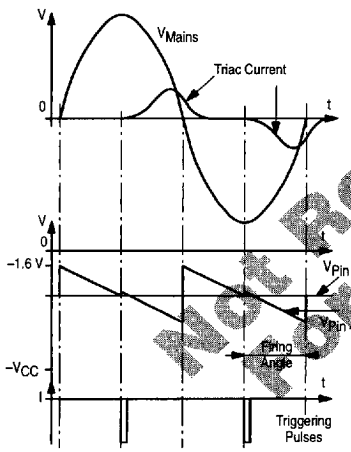

Figure 4. Soft–Start

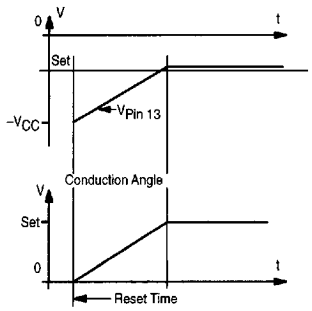

Figure 5. Soft–Start without Deadtime

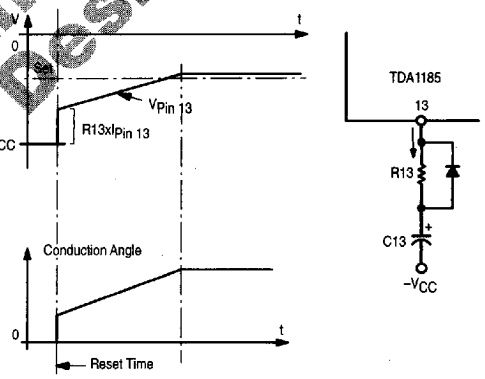

Figure 6. Transfer Function

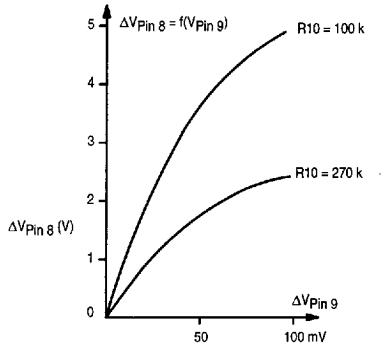

http://www.chipdocs.com

Positive Current Feedback

The Universal motor speed drops as load increases. To maintain the speed, the triac conduction angle must be increased. For this purpose, Pin 9 senses the motor current as a **voltage** developed in a low value resistor, R_9, amplifies, rectifies and adds it internally to the set voltage at Pin 12. Any voltage variation at the output of the feedback, Pin 8, is smoothed out by capacitor C_8. The transfer function, $\Delta V_8 = f(\Delta V_9)$, is shown in Figure 6.

The gain in the linear region is dependent on R_{10}. The voltage transferred to Pin 8 is proportional to the current RMS value, as motor current is not far from a sine wave. This averaging effect is shown in Figure 7.

With large amplitude signals at Pin 9, the change in voltage at Pin 8 reaches a maximum value. This saturation effect limits the maximum conduction angle increase. This effect is illustrated in Figure 8 where the total Pin 8 voltage can be written as follows:

$$V_8 = V_{12} + f(|V_9|, R_{10}) + 1.25$$

The effect of the feedback is illustrated in Figure 9.

Monitoring

A central logic block performs the ENABLE/DISABLE function of the IC with respect to power supply voltage. Under DISABLE conditions, Pin 4, 8, 12 and 13 are forced to appropriate voltages to prepare for the next reset. Refer to the block diagram in Figure 10.

APPLICATION CONSIDERATIONS

Component Selection

To regulate the speed of a universal motor, it is necessary to determine how much gain in the feedback is needed. A change in motor current (due to load increase) causes the conduction angle to change by the appropriate amount to keep the speed constant. This entails, through trial and error, choosing an appropriate resistor value for R_{10}, since the gain of the feedback is determined by value of R_{10} as shown in Figure 8.

Figure 7. Averaging Effect of Transfer Function

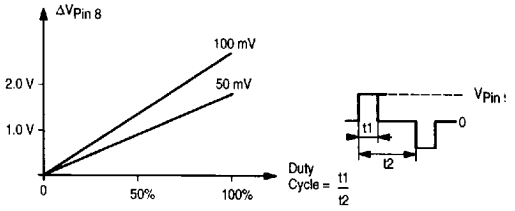

Figure 8. Transfer Function (Pin 8/Pin 9)

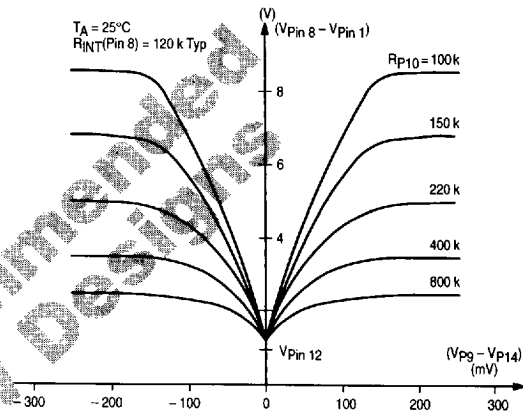

Once R_{10} is picked, C_4 can be calculated from the following equation:

$$C_4 \approx \frac{.672}{f_{line} \times R_{10}}$$

where f_{line} is the line frequency.

Figure 9. Positive Feedback Effect (Offset voltages have been neglected)

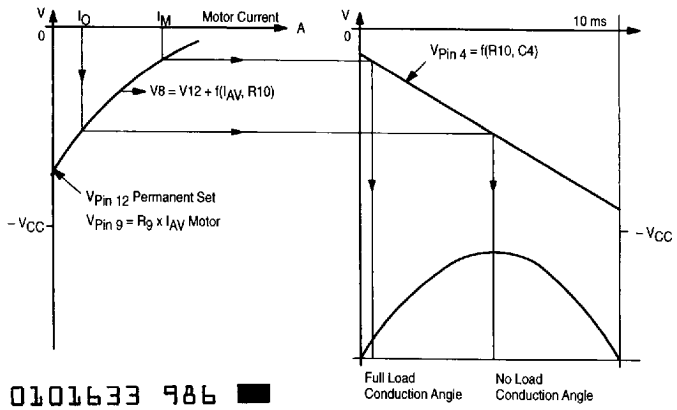

Not Recommended For New Designs

http://www.chipdocs.com

Figure 10. Internal Block Diagram

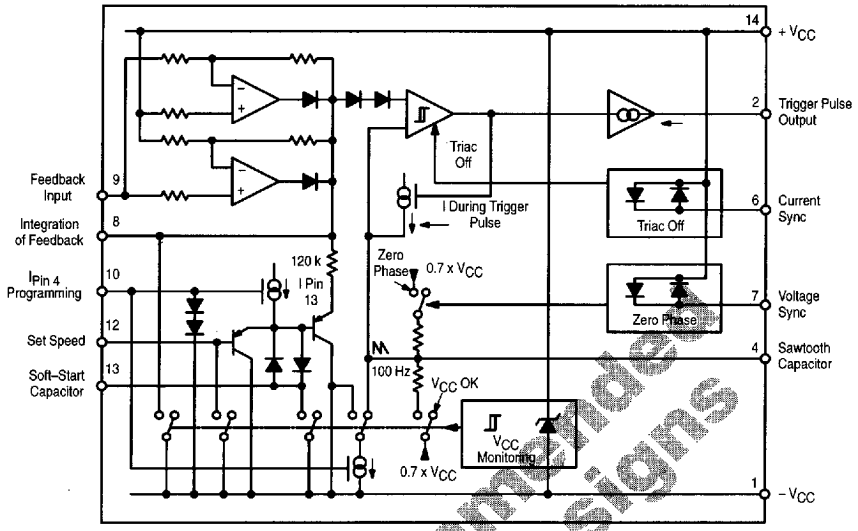

Capacitor C_8 is an integration cap used to smooth out the voltage at Pin 8. The value should be large enough to accomplish this task yet not too large to slow the response of the system.

Capacitor C_{13} determines how fast the conduction angle reaches the set value programmed at Pin 12. To achieve a desired delay, the value for C_{13} can be calculated by the following equation:

$$C_{13} \approx \frac{8 \times t_d}{|8.6 - V_{12}| \times R_{10}}$$

The remaining component values have experimentally been determined and are constant, regardless of application. The following table lists typical values for 110 V application.

Component	Value	Units
R_S	10/2.0 W	kΩ
R_{P1}	100	kΩ
R_{P2}	100	Ω
R_6	330/0.5 W	kΩ
R_7	330/0.5 W	kΩ
R_9	0.05/5.0 W	Ω
R_{10}	100	kΩ
C_4	0.1	µF
C_8	0.22	µF
C_{13}	10	µF

Using an oscilloscope, it should be verified that the ramp generator is ramping down from – 1.6 to – 7.1 V. The slope of the ramp can be changed by C_4 and the DC level of the waveform can be adjusted by R_7.

Pin 9 has a low internal impedance and requires R_{P2} to adjust the feedback level. Pin 8 must always be connected to V_{EE} through a filtering capacitor. For values of R_{10} less than 100 kΩ, the circuit becomes sensitive and could become unstable. Figures 11 and 12 show typical waveforms. As shown, the increase in motor current has resulted in the firing angle to decrease. This translates to an increase in the average power delivered to the load.

Figure 11. No Load Applied

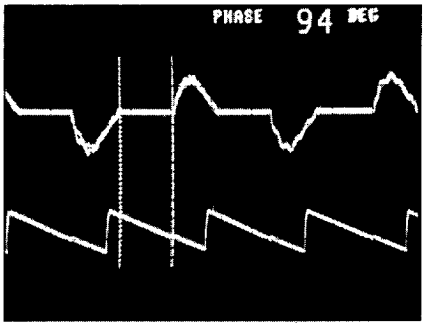

Not Recommended for New Designs

http://www.chipdocs.com

Figure 12. Load Applied

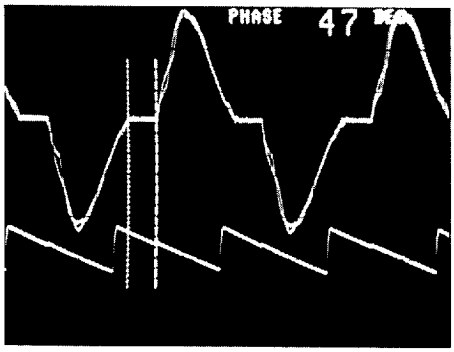

Temperature Effects

The TDA1185A has a very efficient internal temperature compensation. If the current feedback is not connected, the RMS power delivered to the load is stabilized within ± 0.2% over a temperature range of 20 to 70°C. The feedback introduces, in the same temperature range, a drift of 250 mV on the voltage of Pin 8; this slight increase in conduction angle may be successfully used to compensate a motor ohmic resistance increase with temperature.

Main Line Voltage Compensation

As the conduction angle is independent of main line voltage, any change in the latter induces a power variation to the load. A resistor connected to the rectifier anode and to Pin 12 with a capacitor to V_{EE} will introduce a decrease in voltage at Pin 12 as the line voltage is increasing. The values of the RC network can experimentally be determined.

Firing Angle Dynamics

With purely resistive loads, the effective RMS applied voltage to the load is directly proportional to the firing angle (Figure 13). With inductive loads, since the current lags with respect to voltage, 100% power corresponds to a firing angle which is less than 180°.

APPLICATION IDEAS

Soft–Start

The Soft–Start feature of the TDA1185A in itself opens the door to a lot of interesting applications. For example, the TDA1185A can be used to bring up fragile loads slowly. Expensive and sensitive tubes can be turned on slowly, thus eliminating the inrush of current that could lead to burn out. In this application, R_{P1} is replaced with a resistor divider such that the voltage at Pin 12 results in a conduction angle of 180°. Pin 9 should be grounded, since the feedback portion of the TDA1185A is not necessary (see Figure 14). The time to achieve full conduction is found by the equation below:

$$\Delta t \approx 8.71 \times R_{10} \times C_{13}$$

Light Dimmer

With practically no modification the TDA1185A can be used in a light dimmer application. All that is required is to ground the input to the feedback Pin 9. By grounding Pin 9, we have disconnected the feedback loop and the conduction angle is controlled solely by R_{P1}. Further, since the feedback is disconnected, R_9 and R_{P2} are no longer necessary. The Soft–Start feature can still be used to protect the bulb from an inrush of current. This setup can be used in any application that requires manual control of the power delivered to the load (see Figure 15).

Figure 13. RMS Voltage versus Firing Angle

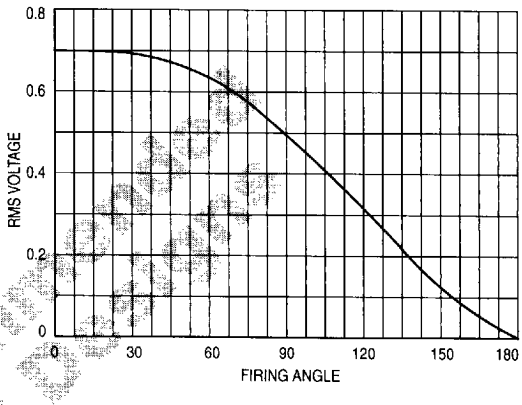

Soft Shut–Off

Once again with little modification, the TDA1185A can be used to turnoff the load slowly. An example of this is in automatic garage lighting. Typically, lights that are on a timer go off without a warning, usually in the most inopportune time (like when you're about to step over the dog). With a soft shut–off, the light dims out slowly, alerting you that it is about to go off. As in the previous case, the feedback is disconnected and R_{P1} is replaced with capacitor C_{12} and a switch (see Figure 16). The turn–off time can be calculated by the following equation:

$$\Delta t \approx R_{12} \times C_{12}$$

R_{12} is the sum of the two resistors on both sides of C_{12}.

Figure 14. Soft–Start Circuit

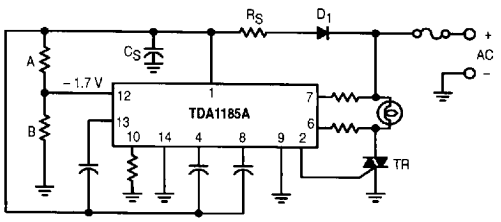

R_S = 10 kΩ 2 W
R_6 = 470 kΩ 1/2 W
R_7 = 470 kΩ 1/2 W
R_{10} = 200 kΩ
$R_{12A} = 4 \times R_{12B}$

C_4 = 44 nF
C_{13} = 10 µF
C_S = 100 µF
Turn–off time = $8.71 \times R_{10} \times C_{13}$

6367253 0101635 759

http://www.chipdocs.com

PC Board

The printed circuit board in Figure 17 is included for the designer's convenience to evaluate the TDA1185A. The size of the board is intentionally small to show the compactness that can be achieved. Figure 18 shows the component layout for the PC board. R_{P1} has one of the outer leads connected to V_{EE} and the other to R_{12}. The center lead of R_{P1} is connected to Pin 12.

Warning Shock Hazard: It is highly recommended that an isolation transformer be used. Remove the chassis ground for all test equipment.

Figure 15. Light Dimmer Circuit

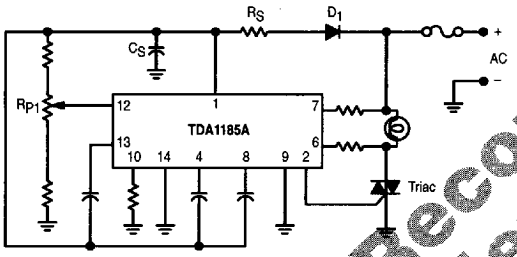

R_P = 100 k
R_S = 10 k 2 W
R_6 = 470 k 1/2 W
R_7 = 470 k 1/2 W
R_{10} = 200 k
C_4 = 44 nF
C_8 = 0.22 µF
C_{13} = 4.7 µF
C_S = 100 µF 16 V

Figure 16. Soft Shut–Off Circuit

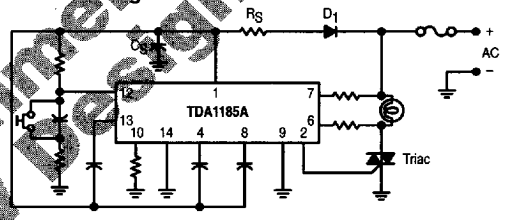

R_S = 10 k 2 W
R_6 = 470 k 1/2 W
R_7 = 470 k 1/2 W
R_{12} = Designer's Choice
R_{10} = 200 k
C_4 = 44 nF
C_{12} = Designer's Choice
C_{13} = 0.47 µF
C_S = 100 µF
Turn–off time = $R_{12} \times C_{12}$

Not Recommended For New Designs

Figure 17. Evaluation Board (Component Side)

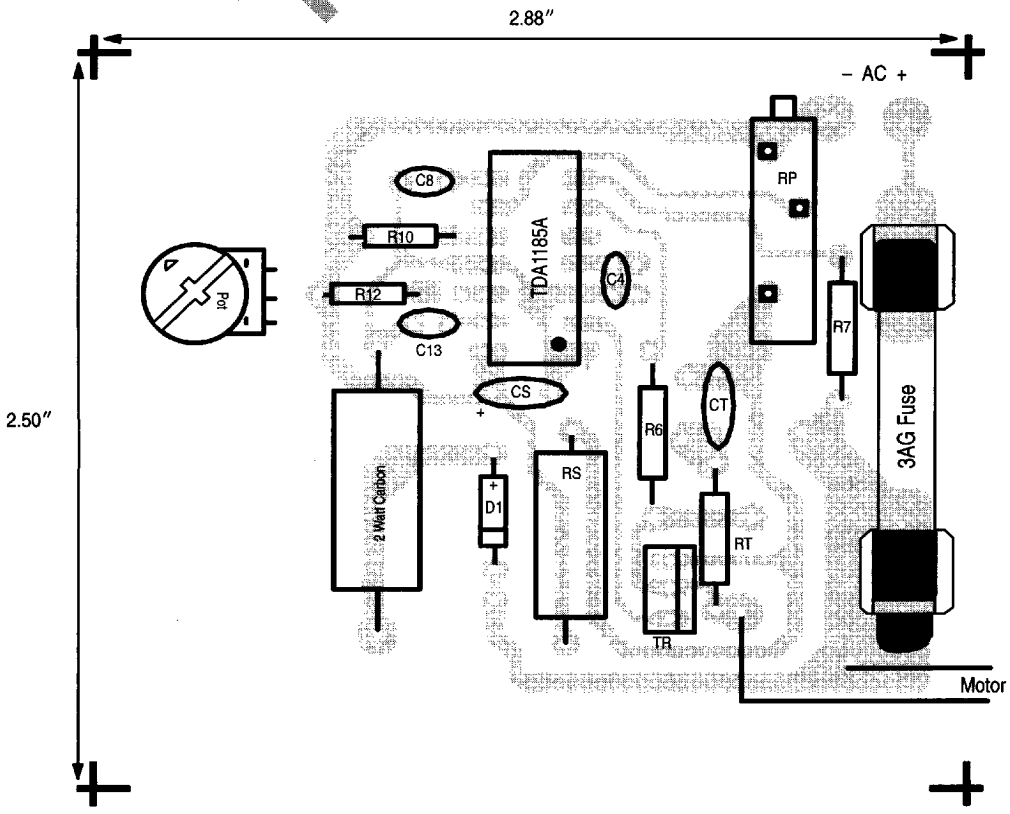

http://www.chipdocs.com

Figure 18. Evaluation Board
(Copper Side)

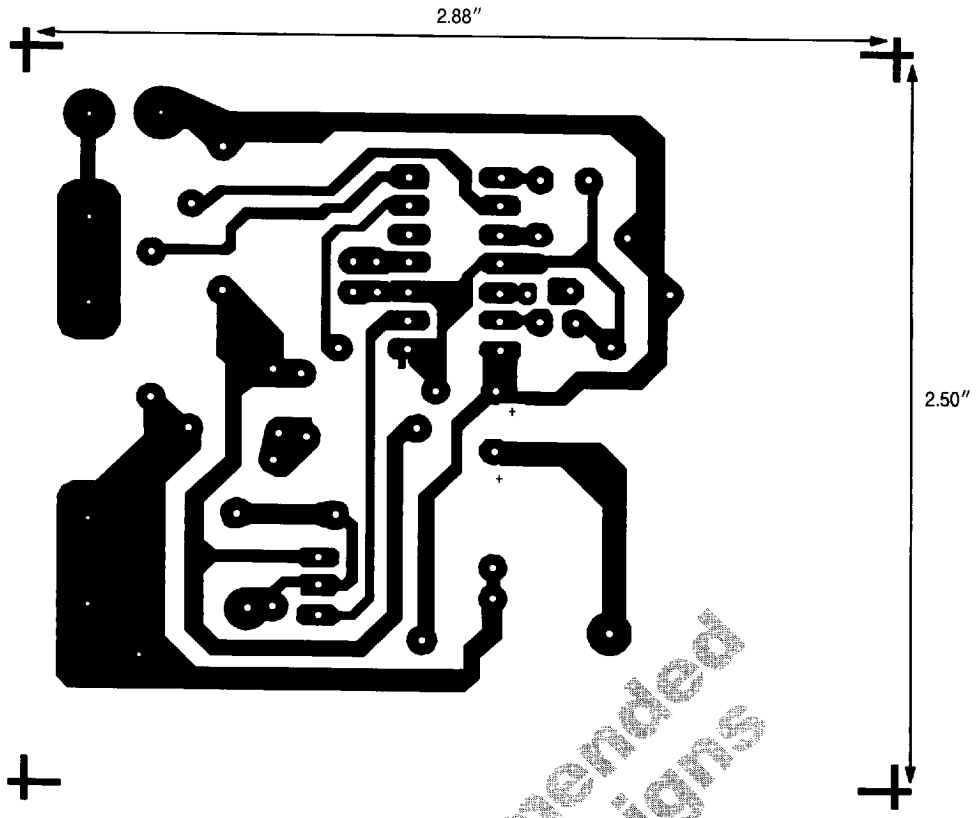

Not Recommended for New Designs

http://www.chipdocs.com