# Optocoupler with Phototransistor Output

## Description

The CQY80N(G) series consist of a phototransistor optically coupled to a gallium arsenide infrared-emitting diode in a 6-lead plastic dual inline package. The elements are mounted on one leadframe using a **coplanar technique**, providing a fixed distance between input and output for highest safety requirements.

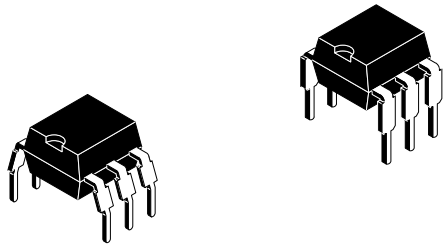

14827

## Applications

Circuits for safe protective separation against electrical shock according to safety class II (reinforced isolation):

- For appl. class I – IV at mains voltage ≤ 300 V
- For appl. class I – III at mains voltage ≤ 600 V according to VDE 0884, table 2, suitable for:

**Switch-mode power supplies, line receiver, computer peripheral interface, microprocessor system interface.**

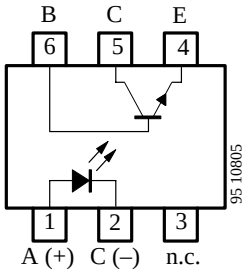


## VDE Standards

These couplers perform safety functions according to the following equipment standards:

- **VDE 0884**
  Optocoupler for electrical safety requirements
- **IEC 950/EN 60950**
  Office machines (applied for reinforced isolation for mains voltage ≤ 400 $V_{RMS}$)
- **VDE 0804**
  Telecommunication apparatus and data processing
- **IEC 65**
  Safety for mains-operated electronic and related household apparatus

0884

## Order Instruction

| Ordering Code | CTR Ranking | Remarks |
|---|---|---|
| CQY80N | > 50% | |
| CQY80NG[1)] | > 50% | |
| [1)] G = Leadform 10.16 mm; G is not market on the body | | |

## Features

**Approvals:**

- **BSI**: BS EN 41003, BS EN 60095 (BS 415), BS EN 60950 (BS 7002), Certificate number 7081 and 7402
- **FIMKO** (SETI): EN 60950, Certificate number 12399
- **U**nderwriters **L**aboratory (UL) 1577 recognized, file number E-76222
- **VDE** 0884, Certificate number 94778

**VDE 0884 related features:**

- Rated impulse voltage (transient overvoltage) $V_{IOTM}$ = 6 kV peak
- Isolation test voltage (partial discharge test voltage) $V_{pd}$ = 1.6 kV
- Rated isolation voltage (RMS includes DC) $V_{IOWM}$ = 600 $V_{RMS}$ (848 V peak)
- Rated recurring peak voltage (repetitive) $V_{IORM}$ = 600 $V_{RMS}$
- Creepage current resistance according to VDE 0303/IEC 112 **C**omparative **T**racking **I**ndex: **CTI** = 275
- Thickness through insulation ≥ 0.75 mm

**General features:**

- Isolation materials according to UL94-VO
- Pollution degree 2 (DIN/VDE 0110 / resp. IEC 664)
- Climatic classification 55/100/21 (IEC 68 part 1)
- Special construction: Therefore, extra low coupling capacity of typical 0.3 pF, high **C**ommon **M**ode **R**ejection
- Low temperature coefficient of CTR
- CTR > 50%
- Coupling System A

## Absolute Maximum Ratings

### Input (Emitter)

| Parameter | Test Conditions | Symbol | Value | Unit |
|---|---|---|---|---|
| Reverse voltage | | $V_R$ | 5 | V |
| Forward current | | $I_F$ | 60 | mA |
| Forward surge current | $t_p \leq 10$ µs | $I_{FSM}$ | 1.5 | A |
| Power dissipation | $T_{amb} \leq 25$˚C | $P_V$ | 100 | mW |
| Junction temperature | | $T_j$ | 125 | ˚C |

### Output (Detector)

| Parameter | Test Conditions | Symbol | Value | Unit |
|---|---|---|---|---|
| Collector emitter voltage | | $V_{CEO}$ | 32 | V |
| Emitter collector voltage | | $V_{ECO}$ | 7 | V |
| Collector current | | $I_C$ | 50 | mA |
| Collector peak current | $t_p/T = 0.5$, $t_p \leq 10$ ms | $I_{CM}$ | 100 | mA |
| Power dissipation | $T_{amb} \leq 25$˚C | $P_V$ | 150 | mW |
| Junction temperature | | $T_j$ | 125 | ˚C |

### Coupler

| Parameter | Test Conditions | Symbol | Value | Unit |
|---|---|---|---|---|
| Isolation test voltage (RMS) | t = 1 min | $V_{IO}$ | 3.75 | kV |
| Total power dissipation | $T_{amb} \leq 25$˚C | $P_{tot}$ | 250 | mW |
| Ambient temperature range | | $T_{amb}$ | –55 to +100 | ˚C |
| Storage temperature range | | $T_{stg}$ | –55 to +125 | ˚C |
| Soldering temperature | 2 mm from case, t ≤ 10 s | $T_{sd}$ | 260 | ˚C |

## Electrical Characteristics ($T_{amb}$ = 25°C)

### Input (Emitter)

| Parameter | Test Conditions | Symbol | Min. | Typ. | Max. | Unit |
|---|---|---|---|---|---|---|
| Forward voltage | $I_F$ = 50 mA | $V_F$ | | 1.25 | 1.6 | V |
| Junction capacitance | $V_R$ = 0, f = 1 MHz | $C_j$ | | 50 | | pF |

### Output (Detector)

| Parameter | Test Conditions | Symbol | Min. | Typ. | Max. | Unit |
|---|---|---|---|---|---|---|
| Collector emitter voltage | $I_C$ = 1 mA | $V_{CEO}$ | 32 | | | V |
| Emitter collector voltage | $I_E$ = 100 µA | $V_{ECO}$ | 7 | | | V |
| Collector emitter cut-off current | $V_{CE}$ = 20 V, $I_f$ = 0, E = 0 | $I_{CEO}$ | | 10 | 200 | nA |

### Coupler

| Parameter | Test Conditions | Symbol | Min. | Typ. | Max. | Unit |
|---|---|---|---|---|---|---|
| Collector emitter saturation voltage | $I_F$ = 10 mA, $I_C$ = 1 mA | $V_{CEsat}$ | | | 0.3 | V |
| Cut-off frequency | $V_{CE}$ = 5 V, $I_F$ = 10 mA, $R_L$ = 100 Ω | $f_c$ | | 110 | | kHz |
| Coupling capacitance | f = 1 MHz | $C_k$ | | 0.3 | | pF |

### Current Transfer Ratio (CTR)

| Parameter | Test Conditions | Type | Symbol | Min. | Typ. | Max. | Unit |
|---|---|---|---|---|---|---|---|
| $I_C/I_F$ | $V_{CE}$ = 5 V, $I_F$ = 10 mA | CQY80N, CQY80NG | CTR | 0.5 | 0.9 | | |

## Maximum Safety Ratings (according to VDE 0884) see figure 1

This device is used for protective separation against electrical shock only within the maximum safety ratings. This must be ensured by using protective circuits in the applications.

### Input (Emitter)

| Parameters | Test Conditions | Symbol | Value | Unit |
|---|---|---|---|---|
| Forward current | | $I_{si}$ | 130 | mA |

### Output (Detector)

| Parameters | Test Conditions | Symbol | Value | Unit |
|---|---|---|---|---|
| Power dissipation | $T_{amb} \leq 25°C$ | $P_{si}$ | 265 | mW |

### Coupler

| Parameters | Test Conditions | Symbol | Value | Unit |
|---|---|---|---|---|
| Rated impulse voltage | | $V_{IOTM}$ | 6 | kV |
| Safety temperature | | $T_{si}$ | 150 | °C |

## Insulation Rated Parameters (according to VDE 0884)

| Parameter | Test Conditions | Symbol | Min. | Typ. | Max. | Unit |
|---|---|---|---|---|---|---|
| Partial discharge test voltage – Routine test | 100%, $t_{test}$ = 1 s | $V_{pd}$ | 1.6 | | | kV |
| Partial discharge test voltage – Lot test (sample test) | $t_{Tr}$ = 60 s, $t_{test}$ = 10 s, (see figure 2) | $V_{IOTM}$ | 6 | | | kV |
| | | $V_{pd}$ | 1.3 | | | kV |
| Insulation resistance | $V_{IO}$ = 500 V | $R_{IO}$ | $10^{12}$ | | | Ω |
| | $V_{IO}$ = 500 V, $T_{amb}$ = 100°C | $R_{IO}$ | $10^{11}$ | | | Ω |
| | $V_{IO}$ = 500 V, $T_{amb}$ = 150°C (construction test only) | $R_{IO}$ | $10^{9}$ | | | Ω |

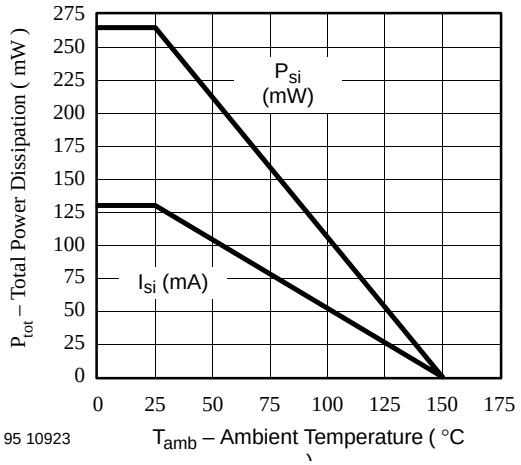


Figure 1. Derating diagram

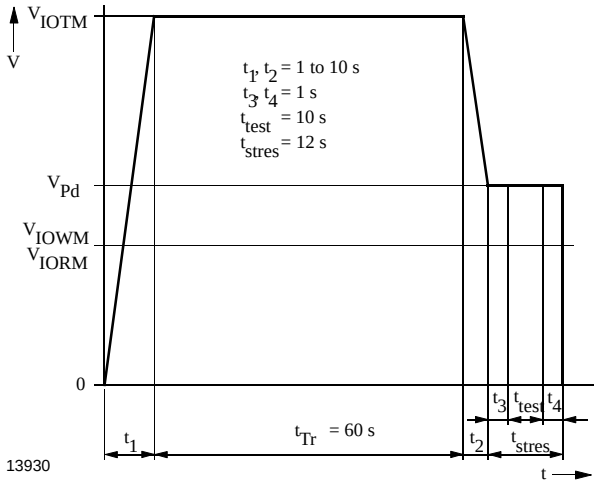


Figure 2. Test pulse diagram for sample test according to DIN VDE 0884

## Switching Characteristics

| Parameter | Test Conditions | Symbol | Typ. | Unit |
|---|---|---|---|---|
| Delay time | $V_S$ = 5 V, $I_C$ = 5 mA, $R_L$ = 100 Ω (see figure 3) | $t_d$ | 4.0 | µs |
| Rise time | | $t_r$ | 7.0 | µs |
| Fall time | | $t_f$ | 6.7 | µs |
| Storage time | | $t_s$ | 0.3 | µs |
| Turn-on time | | $t_{on}$ | 11.0 | µs |
| Turn-off time | | $t_{off}$ | 7.0 | µs |
| Turn-on time | $V_S$ = 5 V, $I_F$ = 10 mA, $R_L$ = 1 kΩ (see figure 4) | $t_{on}$ | 25.0 | µs |
| Turn-off time | | $t_{off}$ | 42.5 | µs |

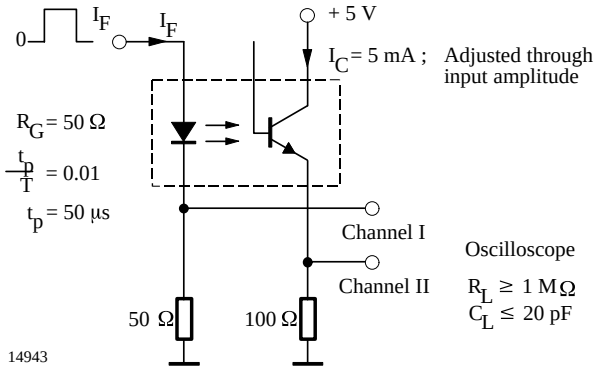


Figure 3. Test circuit, non-saturated operation

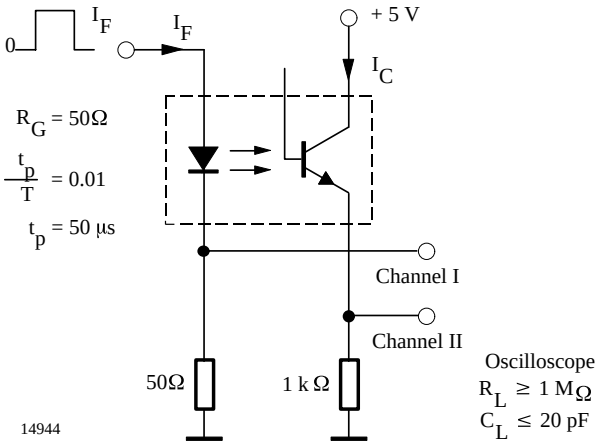


Figure 4. Test circuit, saturated operation

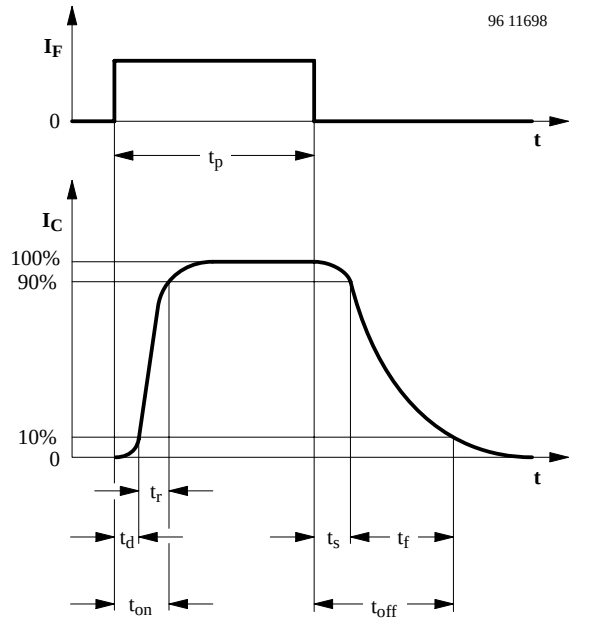


| | | | |
|---|---|---|---|
| $t_p$ | pulse duration | $t_s$ | storage time |
| $t_d$ | delay time | $t_f$ | fall time |
| $t_r$ | rise time | $t_{off}$ (= $t_s$ + $t_f$) | turn-off time |
| $t_{on}$ (= $t_d$ + $t_r$) | turn-on time | | |

Figure 5. Switching times

## Typical Characteristics ($T_{amb}$ = 25°C, unless otherwise specified)

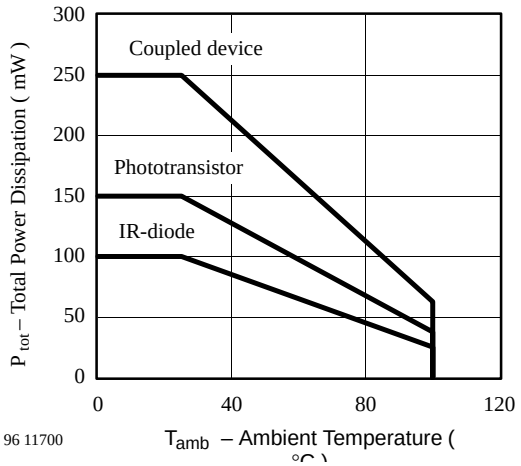


Figure 6. Total Power Dissipation vs. Ambient Temperature

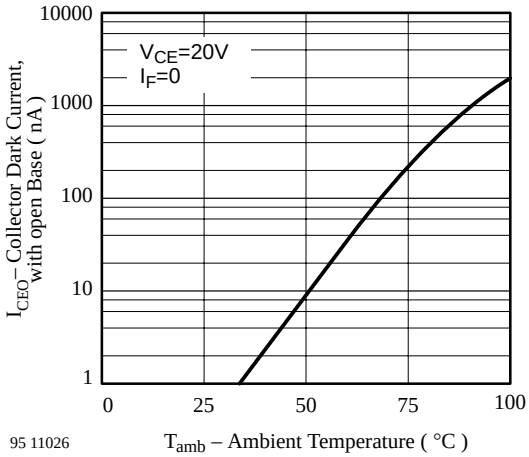


Figure 9. Collector Dark Current vs. Ambient Temperature

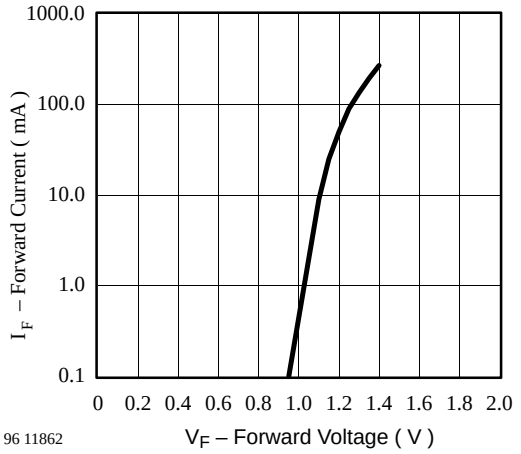


Figure 7. Forward Current vs. Forward Voltage

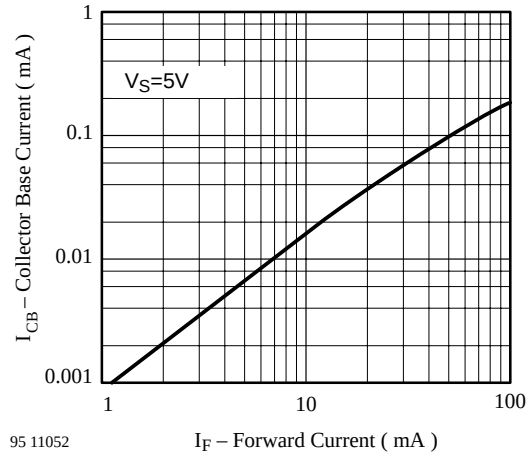


Figure 10. Collector Base Current vs. Forward Current

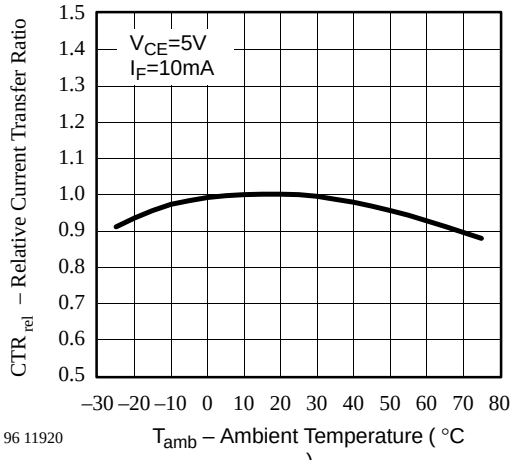


Figure 8. Relative Current Transfer Ratio vs. Ambient Temperature

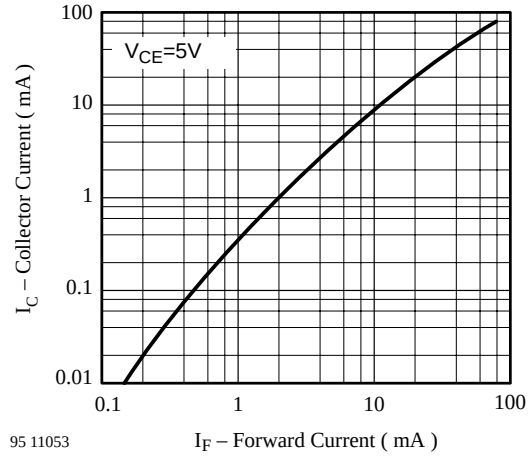


Figure 11. Collector Current vs. Forward Current

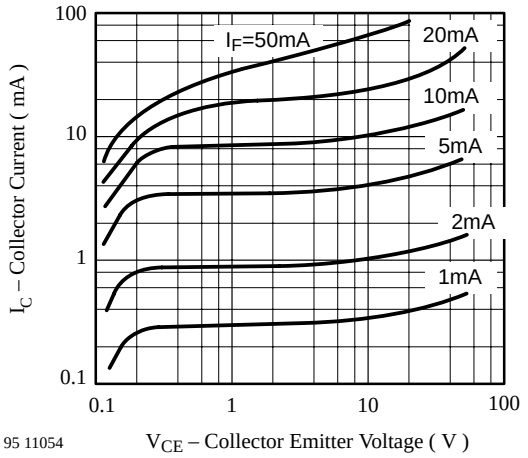


Figure 12. Collector Current vs. Collector Emitter Voltage

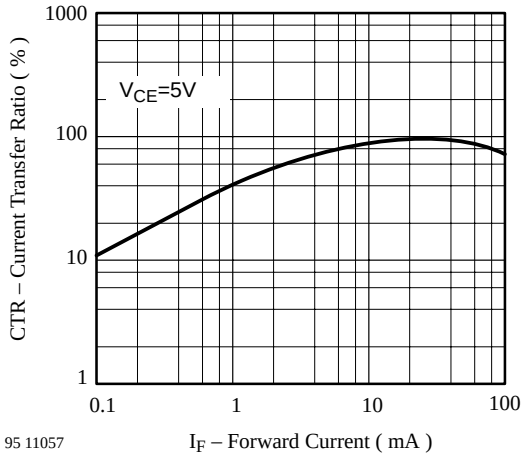


Figure 15. Current Transfer Ratio vs. Forward Current

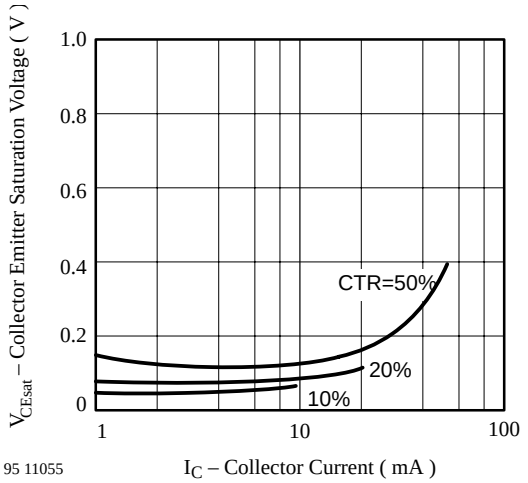


Figure 13. Collector Emitter Saturation Voltage vs. Collector Current

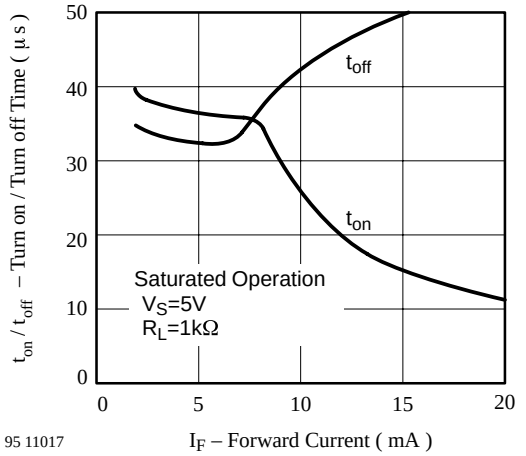


Figure 16. Turn on / off Time vs. Forward Current

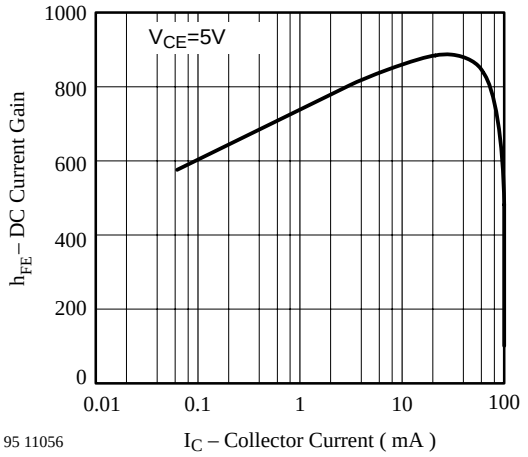


Figure 14. DC Current Gain vs. Collector Current

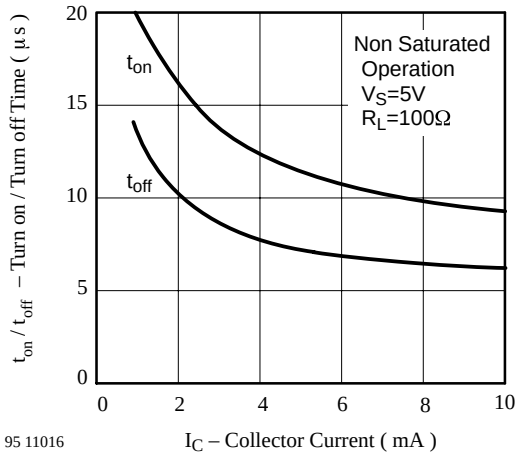


Figure 17. Turn on / off Time vs. Collector Current

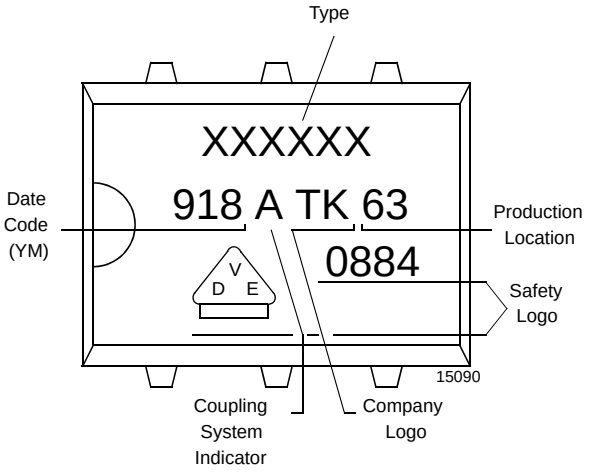


Figure 18. Marking example

## Dimensions of CNY80NG in mm

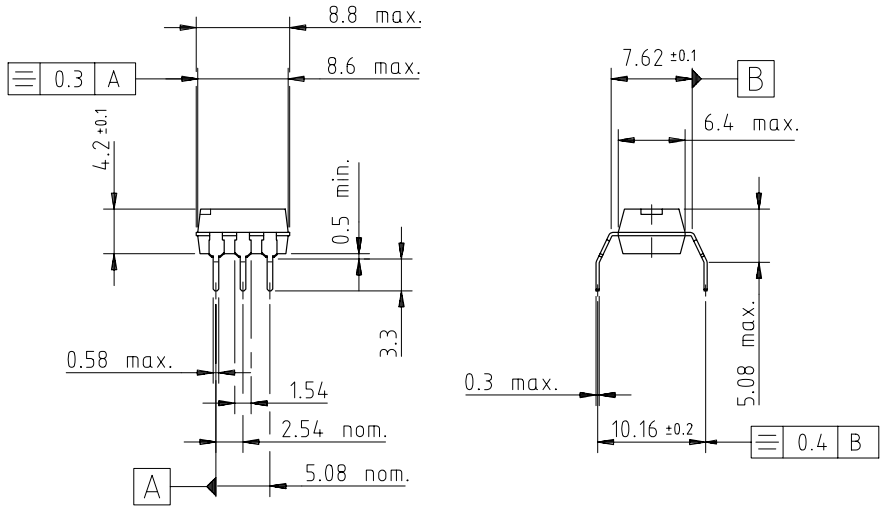


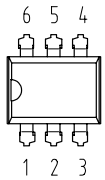


weight: ca. 0.50 g
creepage distance: ≧ 8 mm
air path: ≧ 8 mm

after mounting on PC board

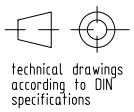


14771

## Dimensions of CNY80N in mm

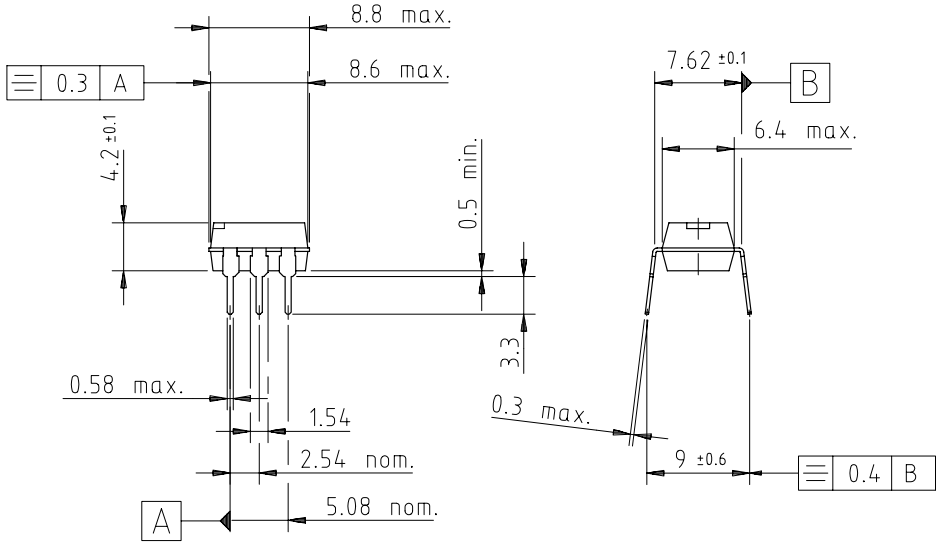


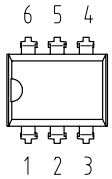


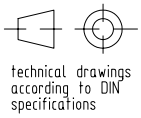


weight: 0.50 g
creepage distance: ≧ 6 mm
air path: ≧ 6 mm

after mounting on PC board

14770