Industry Standard Military 12-bit D/A Converters

FEATURES

- Fully Guaranteed −55°C to +125°C operation
- Linearity and Monotonicity Guaranteed Over Temperature
- 4μsec Settling Time
- Small 24-Pin Hermetic DIP
- No +5V Supply Required
- 480mW Maximum Power Consumption
- Pin-Compatible DAC85-CBI-V, AD DAC87

24 PIN SIDE-BRAZED DIP

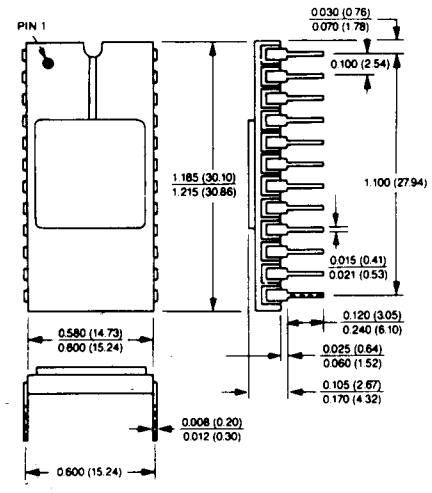

Dimensions in Inches (millimeters)

DESCRIPTION

The MN3850 is a high-performance, TTL-compatible, 12-bit digital-to-analog converter in a 24-pin, hermetically sealed ceramic dual-in-line package. The MN3850 is a monolithic voltage-output D/A complete with an internal reference and fast-settling output amplifier. It is pin-for-pin compatible with industry standard "3850" devices as well as many DAC87 and DAC85/80 D/A converters. The MN3850 guarantees a 4μsec output settling time (20V step settling to ±0.5LSB). Other critical accuracy performance parameters are fully specified and guaranteed over the entire operating temperature range. Linearity and monotonicity are guaranteed over temperature, and full scale absolute accuracy error is specified as ±0.3% FSR maximum over temperature.

The Micro Networks MN3850 has 5 user-selectable output ranges, a fully short-circuit protected output, and a maximum power consumption of 480mW. The MN3850's rugged ceramic package is hermetically sealed, and for military/aerospace applications, MN3850H/B is available with Environmental Stress Screening.

The MN3850 was designed for military/aerospace, industrial and OEM applications in which high-speed D/A conversion in severe, wide-temperature-range environment is required. The MN3850 12-bit D/A converter has become the industry standard for military/aerospace and demanding industrial applications. The MN3850's monolithic design results in improved reliability. Guaranteed monotonicity over temperature makes the MN3850 an excellent choice for military and aerospace control systems.

MN3850 INDUSTRY-STANDARD MILITARY 12-Bit D/A CONVERTERS

ABSOLUTE MAXIMUM RATINGS

Operating Temperature Range	−55°C to +125°C
Specified Temperature Range:	
MN3850	0°C to +70°C
MN3850H, H/B	−55°C to +125°C
Storage Temperature Range	−65°C to +150°C
+15V Supply (+Vcc, Pin 22)	−0.5 to +18 Volts
−15V Supply (−Vcc, Pin 14)	+0.5 to −18 Volts
Digital Inputs (Pins 1-12)	−0.5 to +18 Volts
Output Current	(Note 1)

ORDERING INFORMATION

PART NUMBER — **MN3850H/B**

Standard device is specified for 0°C to 70°C operation.
Add "H" suffix for specified −55°C to +125°C operation.
Add "/B" suffix to "H" models for Environmental Stress Screening.

SPECIFICATIONS (T_A = +25°C, ±Vcc = ±15V unless otherwise indicated) (Note 2)

DIGITAL INPUTS	MIN.	TYP.	MAX.	UNITS
Logic Levels: Logic "1"	+2.0			Volts
Logic "0"			+0.8	Volts
Input Currents: Logic "1" (V_{IH} = +2.4V)			+20	μA
Logic "0" (V_{IL} = +0.4V)			−180	μA
Logic Coding: Unipolar Output Ranges	Complementary Straight Binary			
Bipolar Output Ranges	Complementary Offset Binary			
ANALOG OUTPUT				
Output Voltage Ranges: Unipolar	0 to +5, 0 to +10			Volts
Bipolar	±2.5, ±5, ±10			Volts
Output Impedance (Note 9)		0.05	0.20	Ω
Output Current (Notes 1, 9)	±5			mA
TRANSFER CHARACTERISTICS (Note 3)				
Linearity Error: Initial (+25°C)		±¼	±½	LSB
Over Temperature (Note 4)			±½	LSB
Differential Linearity Error		±½		LSB
Monotonicity	Guaranteed Over Temperature			
Full Scale Absolute Accuracy Error (Note 5): Initial (+25°C)		±0.05	±0.1	%FSR
Over Temperature (Note 4)		±0.15	±0.3	%FSR
Zero Error (Notes 6, 7): Initial (+25°C)		±0.02	±0.05	%FSR
Over Temperature (Note 4)		±0.05	±0.1	%FSR
Gain Error (Notes 6, 8): Initial (+25°C)		±0.1		%
Drift		±10		ppm/°C
DYNAMIC CHARACTERISTICS				
Settling Time to ±0.01%FSR: 20V Step		3	4	μsec
10V Step		2	3	μsec
Slew Rate (Note 9)		±12		V/μsec
INTERNAL REFERENCE				
Internal Reference (Note 9): Voltage		+6.3		Volts
Accuracy		±5		%
Drift		±10		ppm/°C
External Current			2.5	mA
POWER SUPPLIES				
Power Supply Range: +15V Supply	+14.55	+15	+15.45	Volts
−15V Supply	−14.55	−15	−15.45	Volts
Power Supply Rejection: +15V Supply		±0.02	±0.04	%FSR/%Supply
−15V Supply		±0.002	±0.004	%FSR/%Supply
Current Drains: +15V Supply		+8	+12	mA
−15V Supply		−15	−20	mA
Power Consumption		345	480	mW

SPECIFICATIONS

1. The MN3850 is short-circuit protected to ground or either supply.
2. Unless otherwise indicated, listed specifications apply for all MN3850 models.
3. FSR stands for full scale range and is equal to the peak-to-peak voltage of the selected output range. For the ±10V output range, FSR is 20 Volts, and 1 LSB is ideally equal to 4.88mV. For the 0 to +10V and ±5V ranges, FSR is 10 Volts, and 1 LSB is ideally equal to 2.44mV. For the 0 to +5V and ±2.5V ranges, FSR is 5 Volts, and 1 LSB is ideally equal to 1.22mV.
4. MN3850 is specified for 0°C to +70°C operation. MN3850H and MN3850H/B are specified for −55°C to +125°C operation.
5. This specification applies to both unipolar and bipolar output ranges and is specified without adjustment. With optional gain and offset adjustment, initial accuracy error can be reduced to ±0.012%FSR(±1/2LSB).
6. Initial offset and gain errors are adjustable to zero with user-optional, external trimming potentiometers.
7. Zero error is defined as the difference between the actual and the ideal output voltage when configured in a unipolar output range with a digital input of 1111 1111 1111. Additionally, for bipolar ranges, zero error is also defined as the difference between the actual and the ideal output when configured in a bipolar output range with a digital input of 0111 1111 1111.
8. Gain error is defined as the error in the slope of the converter transfer function. It is expressed as a percentage and is equivalent to the deviation (divided by the ideal value) between the actual and the ideal value for the full output voltage span from the 1111 1111 1111 output to the 0000 0000 0000 output.
9. These parameters are listed for reference only and are not tested.

BLOCK DIAGRAM

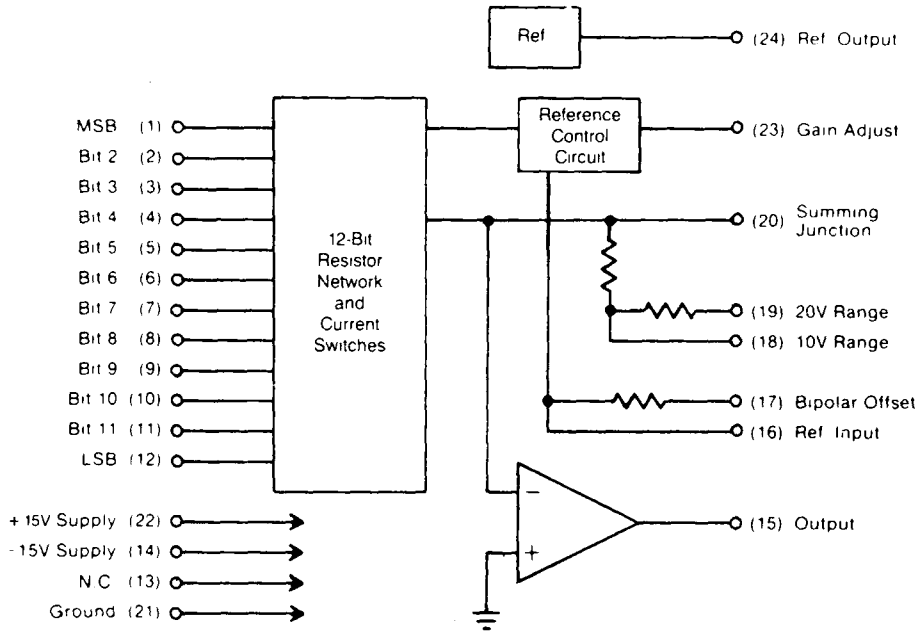

PIN DESIGNATIONS

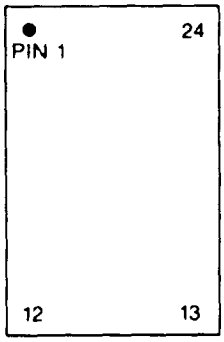

1	Bit 1 (MSB)	24	Reference Out (+6.3V)
2	Bit 2	23	Gain Adjust
3	Bit 3	22	+15V Supply (+Vcc)
4	Bit 4	21	Ground
5	Bit 5	20	Summing Junction
6	Bit 6	19	20V Range
7	Bit 7	18	10V Range
8	Bit 8	17	Bipolar Offset
9	Bit 9	16	Reference Input
10	Bit 10	15	Analog Output
11	Bit 11	14	−15V Supply (−Vcc)
12	Bit 12 (LSB)	13	N.C.

APPLICATIONS INFORMATION

LAYOUT CONSIDERATIONS—Proper attention to layout and bypassing is necessary to obtain specified accuracies from the MN3850. The unit's ground pin (pin 21) should be tied to system analog ground as close to the package as possible, preferably to a large analog ground plane beneath the package. Coupling between analog and digital signals should be minimized to avoid noise pickup. A short jumper should be used when tying the Reference Output (pin 24) to the Reference Input (pin 16). Pin 20, the line to the Summing Junction of the output amplifier, is particularly noise susceptible. Care should be taken to avoid long runs or runs parallel to digital lines when tying to this pin for output range selection. If optional external offset and gain adjusting is used, the series resistors should be located as close to the package as possible, and short conductor runs should be used.

For optimum performance and noise rejection, power supplies should be bypassed with capacitors located as close to the unit as possible. We have found 1μF tantalum capacitors paralleled with 0.01μF ceramic capacitors to be a cost-effective combination. Single 1μF ceramic capacitors can be used to save space.

POWER SUPPLY BYPASSING

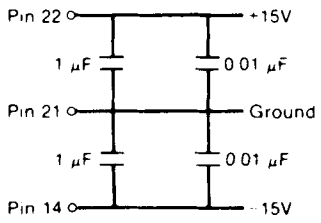

REFERENCE OUTPUT—The MN3850 contains an internal +6.3V ±5% voltage reference, and units are actively laser trimmed to operate from this reference. Therefore, though the user has the option of using an external reference, for specified operation, the Reference Output (pin 24) must be connected to the Reference Input (pin 16). If the internal reference is used to drive an external load, the load current should not exceed 2.5mA.

OPTIONAL OFFSET AND GAIN ADJUSTMENTS—The MN3850 will operate as specified without additional adjustments. If desired, input/output accuracy error can be reduced to ±½LSB (±0.012%FSR) by following the trimming procedures described below. Adjustments should be made following warmup, and to avoid interaction, offset must be adjusted before gain. Multiturn potentiometers with TCR's of 100ppm/°C or less are recommended to minimize drift with temperature. Series resistors can be ±20% carbon composition or better. If these adjustments are not used, pins 20 and 23 should not be connected to ground.

OFFSET ADJUSTMENT—Connect the offset potentiometer as shown below and apply the digital input 1111 1111 1111. Adjust the offset potentiometer until the output is exactly zero volts for unipolar ranges and minus full scale for bipolar ranges. See Input Logic Coding.

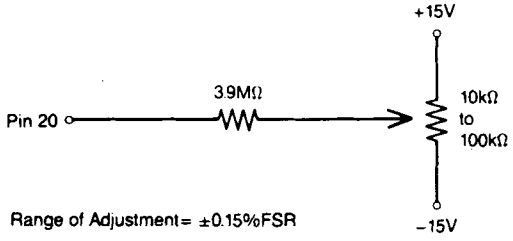

GAIN ADJUSTMENT—Connect the gain potentiometer as shown below and apply a 0000 0000 0000 digital input. Adjust the gain potentiometer until the output voltage is at its ideal positive full scale value (+F.S.-1 LSB, see Input Logic Coding).

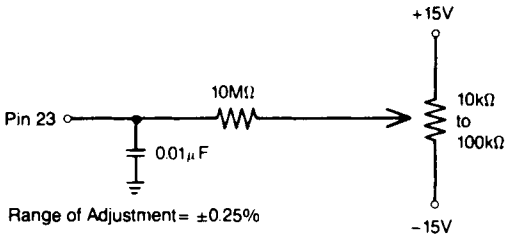

OUTPUT RANGE SELECTION

Pin Connections	Output Range				
	0 to +5V	0 to +10V	±2.5V	±5V	±10V
Connect Pin 24 to	16	16	16	16	16
Connect Pin 17 to	21	21	20	20	20
Connect Pin 15 to	18	18	18	18	19
Connect Pin 19 to	20	N.C.	20	N.C.	15
Connect Pin 20 to	19	N.C.	19,17	17	17

INPUT LOGIC CODING

Digital Input	Analog Output				
MSB LSB	0 to +5V	0 to +10V	±2.5V	±5V	±10V
0000 0000 0000	+4.9988V	+9.9976V	+2.4988V	+4.9976V	+9.9951V
0000 0000 0001	+4.9976V	+9.9951V	+2.4976V	+4.9951V	+9.9902V
0111 1111 1111	+2.5000V	+5.0000V	0.0000V	0.0000V	0.0000V
1000 0000 0000	+2.4988V	+4.9976V	-0.0012V	-0.0024V	-0.0049V
1111 1111 1110	+0.0012V	+0.0024V	-2.4988V	-4.9976V	-9.9951V
1111 1111 1111	0.0000V	0.0000V	-2.5000V	-5.0000V	-10.0000V

CODING NOTES

1. For unipolar operation, the coding is complementary straight binary (CSB).
2. For bipolar operation, the coding is complementary offset binary (COB).
3. For FSR=20V, 1 LSB=4.88mV.
4. For FSR=10V, 1 LSB=2.44mV.
5. For FSR=5V, 1 LSB=1.22mV.