Single-Phase Full Wave Bridges

1.0 Amperes through 10.0 Amperes
For P.C. Board and Chassis Mounting

This mark indicates recognition under the component program of Underwriters Laboratories, Inc.

CSdc BRAND

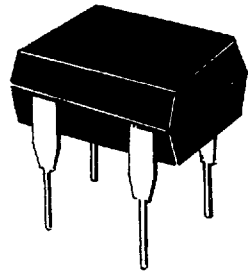

CSB Series

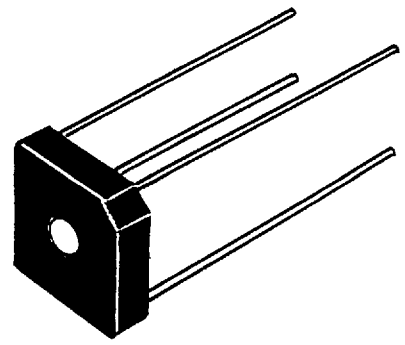

dc6 Series

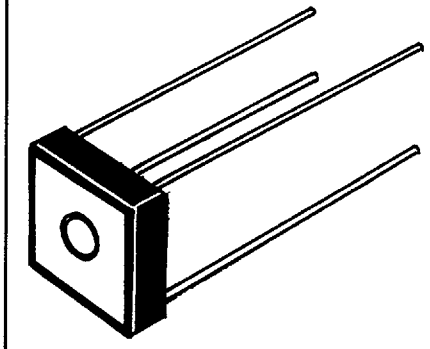

dc1 Series

Peak Inverse Voltage–Leg	50V	100V	200V	400V	600V*
1.0 Amp Series	CSB05	CSB1	CSB2	CSB4	CSB6
6.0 Amp Series	dc600.5	dc601	dc602	dc604	dc606
10.0 Amp Series	dc100.5	dc101	dc102	dc104	dc106

Electrical Characteristics Per Leg–At T_A – 25°C (Unless otherwise specified)

	CSB	dc6	dc1	
Maximum forward voltage drop–V_F @ $I_F = I_O$	1.2	1.3	1.3	Volts
Maximum DC reverse current @ PRV and 25°C, I_R	5.0	5.0	5.0	µA
Maximum peak surge current–I_{FSM} (8.3 ms)	50	100	150	Amp
Ambient operating temperature range–T_A		-55 to + 150		°C
Storage temperature range–T_{stg}		-55 to + 150		°C

Please Note:
- *Higher Voltages Available–Consult Factory
- *Fast Recovery Available–Consult Factory
- *Avalanche Types Available–Consult Factory

Imported and Distributed by
C&D Sales
A DEAN TECHNOLOGY COMPANY

Continuous product improvement is a policy of C & D Sales.
Therefore, specifications and design are subject to change without notice.

Mailing Address: P.O. Box 2484, Farmingdale, NJ 07727 **Shipping Address:** 1709 Route 34, Wall Township, NJ 07719
JD1 1360 **Tel:** (908) 938-4499 • **FAX:** 908 938-4451

2706846 0000164 034

C&D SALES

Single-Phase Full Wave Bridges

1.0 Amperes through 10.0 Amperes—For P.C. Board and Chassis Mounting

Figure 1

Output Current vs Ambient Temperature

dc1 Series–case temperature
dc6 Series–case temperature
CSB Series–ambient temperature

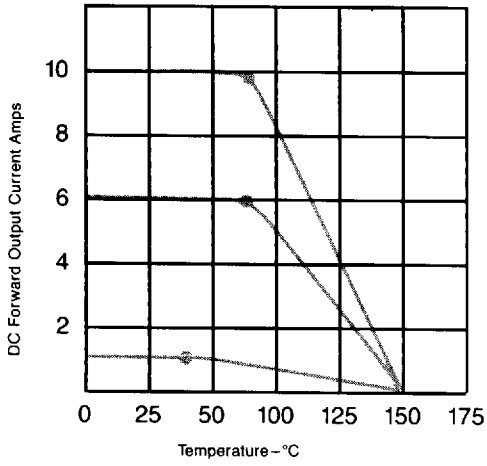

Figure 2

Maximum Peak Non-Repetitive Surge Current

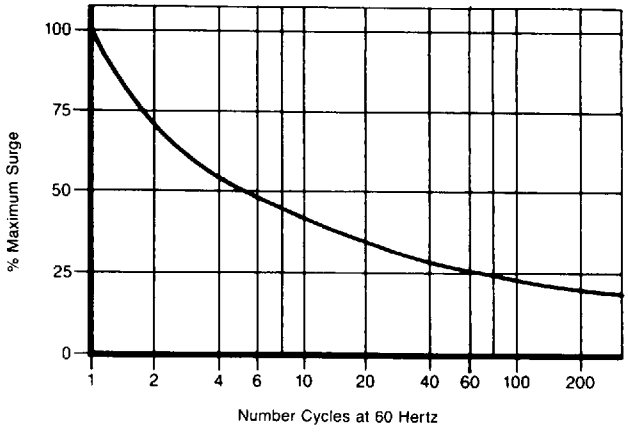

Packaging

dc6 Series
dc1 Series

dc6 Series– + corner beveled
dc1 Series–Heat Sink molded in base.

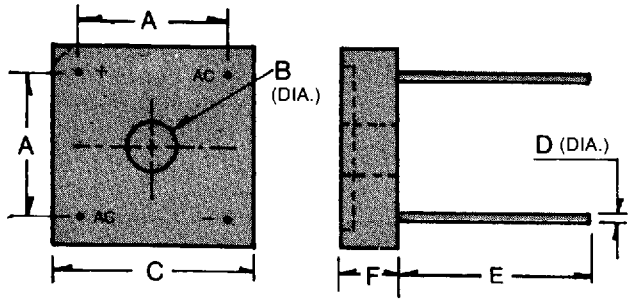

Dimensions

	Inches		MM	
	Min.	Max.	Min.	Max.
A	.405	.445	10.5	11.3
B	.137	.167	3.48	4.24
C	.62	Max.	15.8	Max.
D	.038	.042	.970	1.07
E	1.0	—	25.4	—
F	—	.21	—	5.4

Packaging

CSB Series

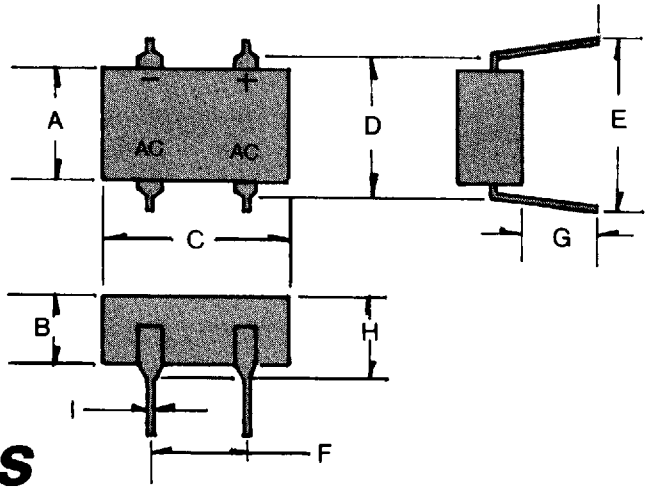

Dimensions

	Inches		MM	
	Min.	Max.	Min.	Max.
A	.240	.260	6.10	6.60
B	.140	.160	3.56	4.06
C	.370	.390	9.40	9.91
D	.280	.320	7.11	8.13
E	.300	.340	7.62	8.38
F	.190	.210	4.83	5.33
G	.140	—	3.56	—
H	—	.217	—	5.51
I	.016	.022	.40	.56

C&D Sales
A DEAN TECHNOLOGY COMPANY

Mailing Address: P.O. Box 2484, Farmingdale, NJ 07727 **Shipping Address:** 1709 Route 34, Wall Township, NJ 07719
Tel: (908) 938-4499 • **FAX:** 908 938-4451