Inductor Data Sheet

LQH3NPN100MJR#

“ # ” indicates a package specification code.

In Production | General | 105 ℃ | Wound (Shield) | LowRdc | Reflow OK | RoHS | REACH

< List of part numbers with package codes >
LQH3NPN100MJRL

Shape

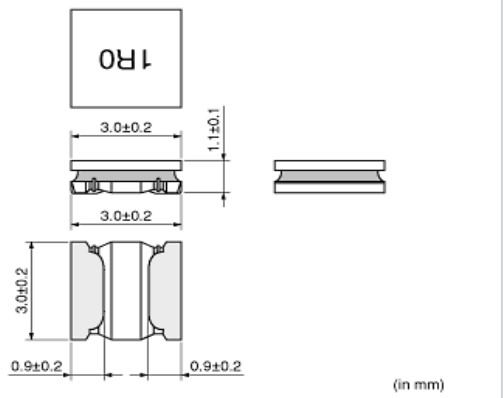



L size	3.0 ±0.2mm
W size	3.0 ±0.2mm
T size	1.1 ±0.1mm
Size code in inch (mm)	1212 (3030)

Specifications

Inductance	10μH ±20%
Inductance test frequency	1MHz
Rated current (Isat) (Based on Inductance change)	810mA
Rated current (Itemp) (Based on Temperature rise)	1200mA(Ambient temperature 85℃) 530mA(Ambient temperature 105℃)
Max. of DC resistance	0.288Ω
Avg. of DC resistance	0.24Ω±20%
Self resonance frequency (min.)	30MHz
Operating temperature range (Self-temperature rise is included)	-40～125℃
Operating temperature range (Self-temperature rise is not included)	-40～105℃
Class of magnetic shield	Magnetic shield of magnetic powder in resin

Notes

When applied Rated current to the Products, Inductance will be within ±30% of initial inductance value range.
Keep the temperature (ambient temperature plus self-generation of heat) under 125℃.
When applied Rated current to the Products, temperature rise caused by self-generated heat shall be limited to 40℃ max.(Ambient temperature 85℃).
When applied Rated current to the Products, temperature rise caused by self-generated heat shall be limited to 20℃max.(Ambient temperature 85℃ to 105℃).

References

Packaging code	Specifications	Minimum quantity
L	φ180mm Embossed taping	2000

Mass (Typ.)	
1 piece	0.045g

Attention

1.This datasheet is downloaded from the website of Murata Manufacturing Co., Ltd. Therefore, it ’ s specifications are subject to change or our products in it may be discontinued without advance notice. Please check with our sales representatives or product engineers before ordering.
2.This datasheet has only typical specifications because there is no space for detailed specifications.
Therefore, please review our product specifications or consult the approval sheet for product specifications before ordering.

Chart of characteristic data (The charts below may show another part number which shares its characteristics.)

- Inductance-Frequency characteristics (Typ.)

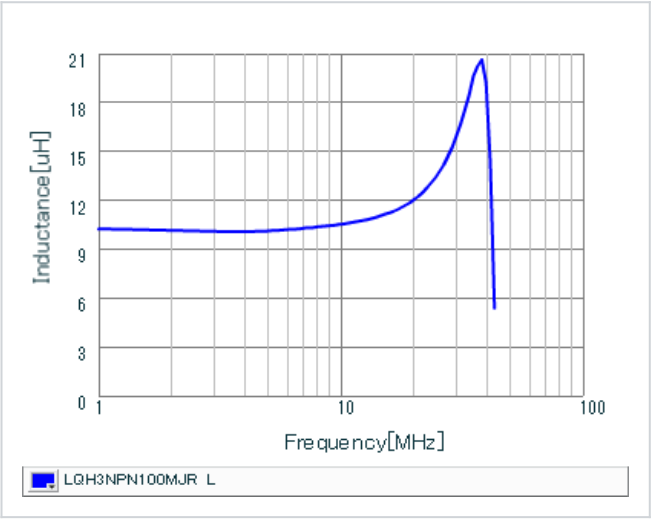

- Inductance-Current characteristics (Typ.)

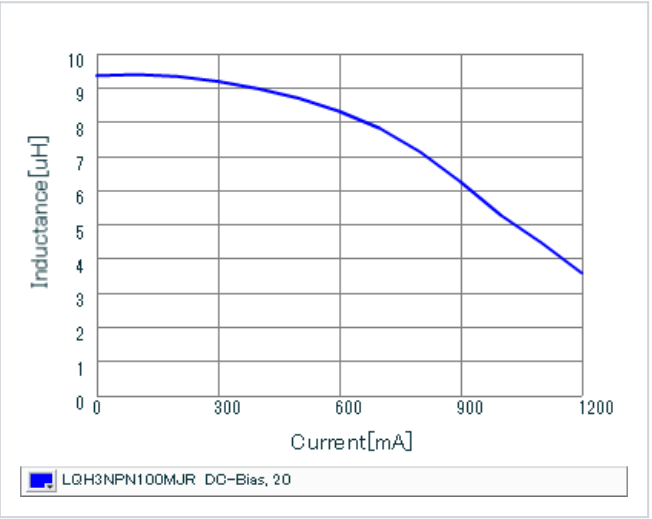

- Temperature rise characteristics (Typ.)

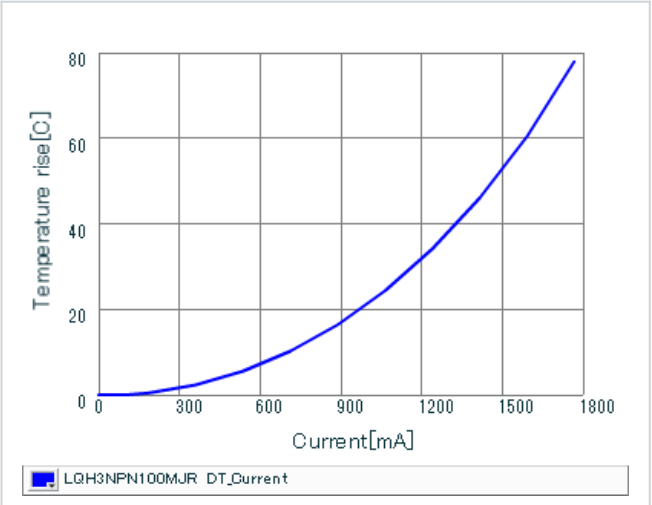

This PDF data has only typical specifications because there is no space for detailed specifications.
Therefore, please reviewour product specifications or consult the approval sheet for product specifications before ordering.

muRata Murata Manufacturing Co., Ltd.
Last updated: 2016/04/21