SOLID-STATE HEXADECIMAL DISPLAY WITH INTEGRAL TTL CIRCUIT TO ACCEPT, STORE, AND DISPLAY 4-BIT BINARY DATA

- **0.300-Inch (7,62-mm) Character Height**
- **High Brightness**
- **Left-and-Right-Hand Decimals**
- **Separate LED and Logic Power Supplies May Be Used**
- **Wide Viewing Angle**
- **Internal TTL MSI Chip With Latch, Decoder, and Driver**
- **Operates from 5-V Supply**
- **Constant-Current Drive for Hexadecimal Characters**
- **Easy System Interface**

mechanical data

These assemblies consist of display chips and a TTL MSI chip mounted on a header with a red molded plastic body. Multiple displays may be mounted on 0.450-inch (11,43-mm) centers.

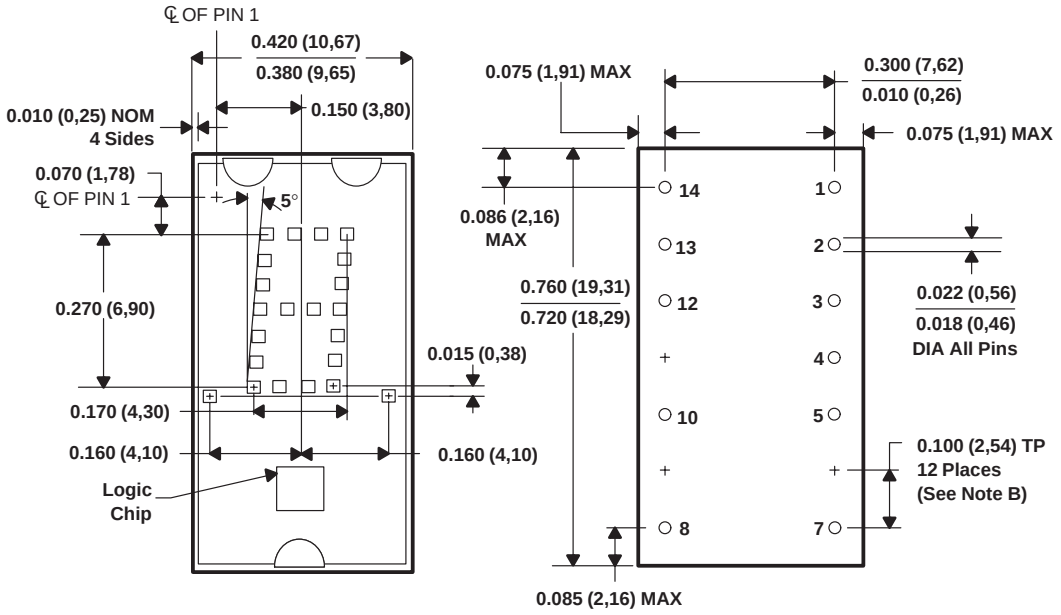

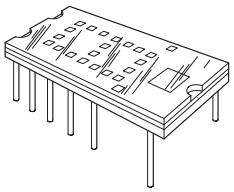

PIN 1	LED SUPPLY VOLTAGE
PIN 2	LATCH DATA INPUT B
PIN 3	LATCH DATA INPUT A
PIN 4	LEFT DECIMAL POINT CATHODE
PIN 5	LATCH STROBE INPUT
PIN 6	OMITTED
PIN 7	COMMON GROUND
PIN 8	BLANKING INPUT
PIN 9	OMITTED
PIN 10	RIGHT DECIMAL POINT CATHODE
PIN 11	OMITTED
PIN 12	LATCH DATA INPUT D
PIN 13	LATCH DATA INPUT C
PIN 14	LOGIC SUPPLY VOLTAGE, V_{CC}

NOTES: A. All linear dimensions are in inches and (parenthetically) in millimeters.
B. The true-position pin spacing is 0.100 (2,54) between centerlines. Each centerline is located within 0.010 (0,26) of its true longitudinal position relative to pins 1 and 14.
C. Associated centerlines of character segments and decimal point dimensions are nominal.

PRODUCTION DATA information is current as of publication date. Products conform to specifications per the terms of Texas Instruments standard warranty. Production processing does not necessarily include testing of all parameters.

Copyright © 1997, Texas Instruments Incorporated

TEXAS INSTRUMENTS
POST OFFICE BOX 655303 • DALLAS, TEXAS 75265
POST OFFICE BOX 1443 • HOUSTON, TEXAS 77251–1443

description

This hexadecimal display contains a four-bit latch, decoder, driver, and 4 × 7 light-emitting-diode (LED) character with two externally driven decimal points in a 14-pin package. A description of the input functions of this device follows.

FUNCTION	PIN NO.	DESCRIPTION
LATCH STROBE INPUT	5	When low, the data in the latches follow the data on the latch data inputs. When high, the data in the latches will not change. If the display is blanked and then restored while the enable input is high, the previous character will again be displayed.
BLANKING INPUT	8	When high, the display is blanked regardless of the levels of the other inputs. When low, a character is displayed as determined by the data in the latches. The blanking input may be pulsed for intensity modulation.
LATCH DATA INPUTS (A, B, C, D)	3, 2, 13, 12	Data on these inputs are entered into the latches when the enable input is low. The binary weights of these inputs are A = 1, B = 2, C = 4, D = 8.
DECIMAL POINT CATHODES	4, 10	These LEDs are not connected to the logic chip. If a decimal point is used, an external resistor or other current-limiting mechanism must be connected in series with it.
LED SUPPLY	1	This connection permits the user to save on regulated V_{CC} current by using a separate LED supply, or it may be externally connected to the logic supply (V_{CC}).
LOGIC SUPPLY VOLTAGE (V_{CC})	14	Separate V_{CC} connection for the logic chip
COMMON GROUND	7	This is the negative terminal for all logic and LED currents except for the decimal points.

The LED driver outputs are designed to maintain a relatively constant on-level current of approximately 5 mA through each LED that forms the hexadecimal character. This current is virtually independent of the LED supply voltage within the recommended operating conditions. Drive current varies slightly with changes in logic supply voltage resulting in a change in luminous intensity as shown in Figure 2. This change will not be noticeable to the eye. The decimal point anodes are connected to the LED supply; the cathodes are connected to external pins. Since there is no current limiting built into the decimal point circuits, limiting must be provided externally if the decimal points are used.

The resultant displays for the values of the binary data in the latches are as shown below.

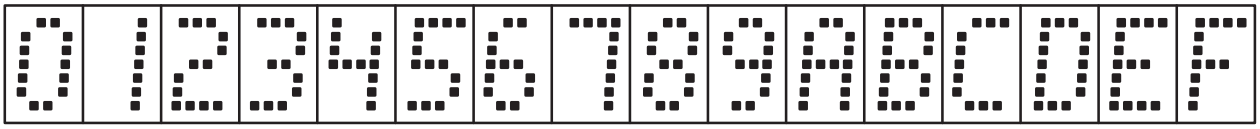

0 1 2 3 4 5 6 7 8 9 10 11 12 13 14 15

functional block diagram

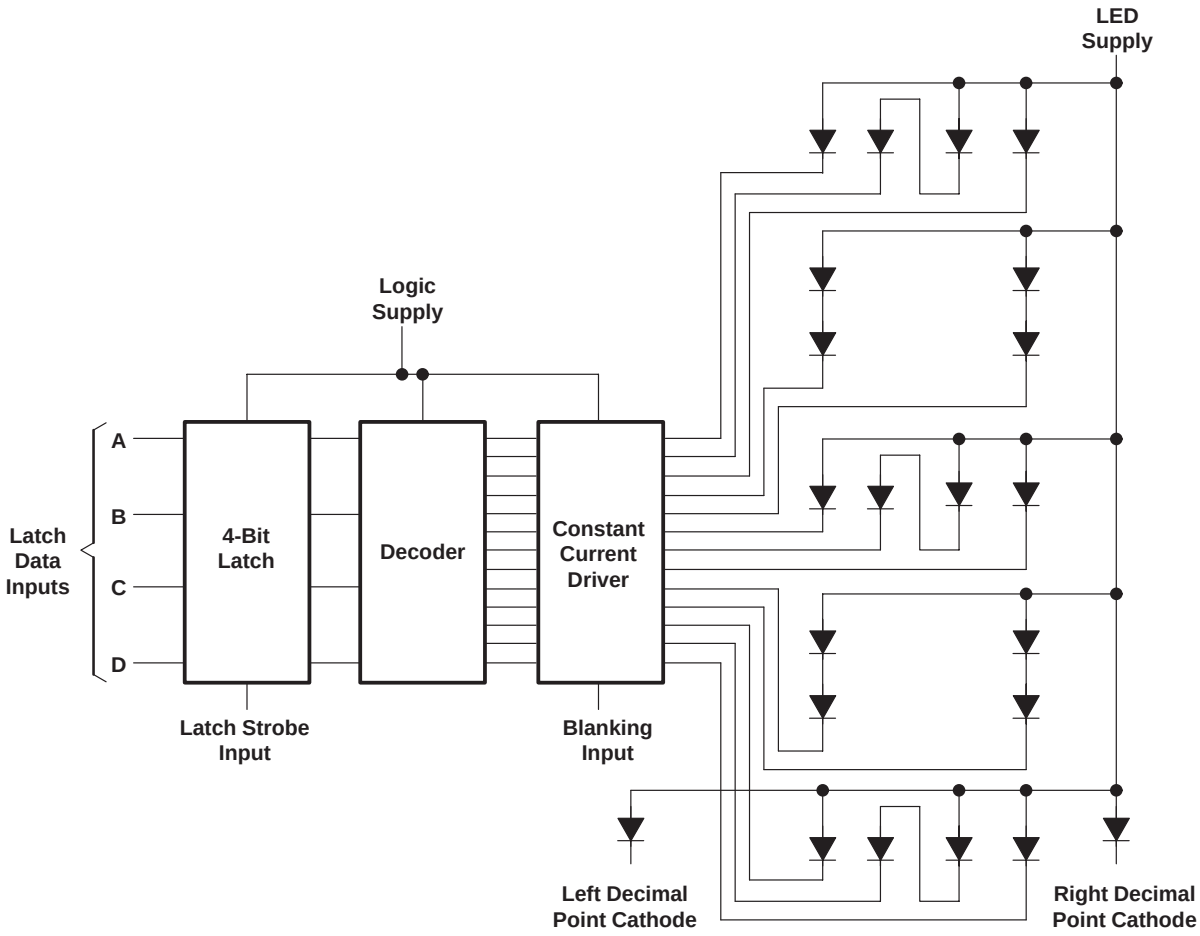

absolute maximum ratings over operating case temperature range (unless otherwise noted)

Supply voltage, V_{CC}, logic (see Note 1) . . . . . 7 V
Supply voltage, LED (see Note 1) . . . . . 7 V
Input voltage (pins 2, 3, 5, 8, 12, 13) (see Note 1) . . . . . 5.5 V
Decimal point current . . . . . 20 mA
Operating case temperature range (see Note 2) . . . . . 0°C to 85°C
Storage temperature range . . . . . –25°C to 85°C

NOTES: 1. Voltage values are with respect to common ground terminal.
2. Case temperature is the surface temperature of the plastic measured directly over the integrated circuit. Forced-air cooling may be required to maintain this temperature.

recommended operating conditions

	MIN	NOM	MAX	UNIT
Supply voltage, V_{CC}, logic	4.5	5	5.5	V
Supply voltage, V_{LED}, LED	4	5	5.5	V
Decimal point current, $I_{F(DP)}$		5		mA
Pulse duration, t_w, latch strobe	40			ns
Setup time, t_{su}	50			ns
Hold time, t_h	40			ns

operating characteristics at T_A = 25°C

PARAMETER			TEST CONDITIONS		MIN	TYP	MAX	UNIT
I_V	Luminous intensity (see Note 3)	Average per character LED	V_{CC} = 5 V, See Note 4	V_{LED} = 5 V,	35	100		μcd
		Each decimal	$I_{F(DP)}$ = 5 mA		35	100		μcd
λ_p	Wavelength at peak emission		V_{CC} = 5 V, $I_{F(DP)}$ = 5 mA,	V_{LED} = 5 V, See Note 5		660		nm
$\Delta\lambda$	Spectral bandwidth					20		nm
V_{IH}	High-level ilnput voltage				2			V
V_{IL}	Low-level input voltage						0.8	V
V_{IK}	Input clamp voltage		V_{CC} = 4.75 V,	I_I = –12 mA			–1.5	V
I_I	Input current		V_{CC} = 5.5 V,	V_I = 5.5 V			1	mA
I_{IH}	High-level input current		V_{CC} = 5.5 V,	V_I = 2.4 V			40	μA
I_{IL}	Low-level input current		V_{CC} = 5.5 V,	V_I = 0.4 V			–1.6	mA
I_{CC}	Supply current, logic		V_{CC} = 5.5 V, $I_{F(DP)}$ = 5 mA,	V_{LED} = 5.5 V, All inputs at 0 V		60	90	mA
I_{LED}	Supply current, LED					45	90	mA

NOTES: 3. Luminous intensity is measured with a light sensor and filter combination that approximates the CIE (International Commission on Illumination) eye-response curve.

4. This parameter is measured with A displayed, then again with E displayed.

5. These parameters are measured with B displayed.

TYPICAL CHARACTERISTICS

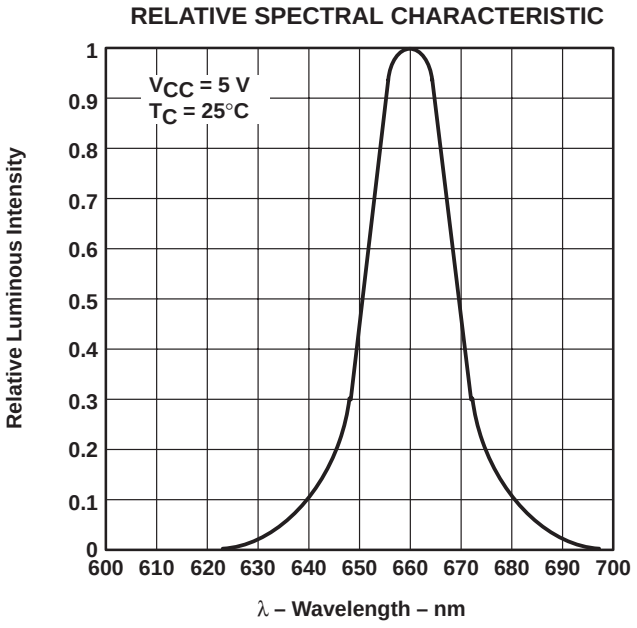

Figure 1

TYPICAL CHARACTERISTICS

**RELATIVE LUMINOUS INTENSITY
vs
LOGIC SUPPLY VOLTAGE**

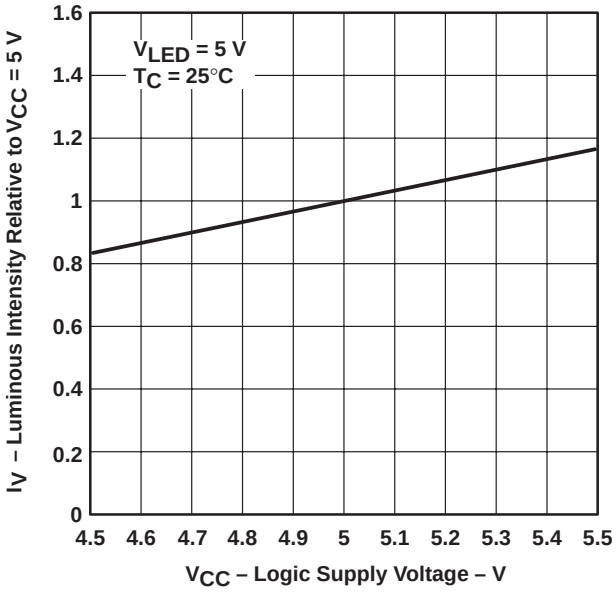

Figure 2

**RELATIVE LUMINOUS INTENSITY
vs
CASE TEMPERATURE**

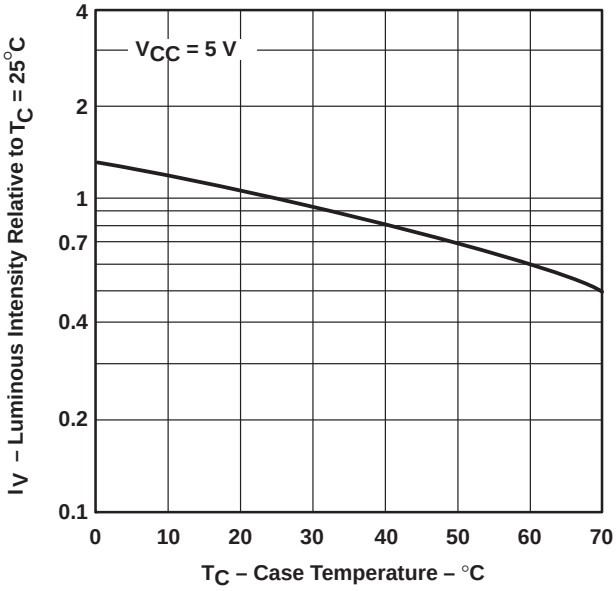

Figure 3