TIP3055
N-P-N SILICON POWER TRANSISTOR

T-33-13

DECEMBER 1970 – REVISED OCTOBER 1984

- Designed for Complementary Use with TIP2955
- 90 W at 25°C Case Temperature
- 15 A Continuous Collector Current
- Plastic-Case Version of 2N3055
- Designed for Automotive Ignition, Linear Amplifier and Power Amplifier Applications

device schematic

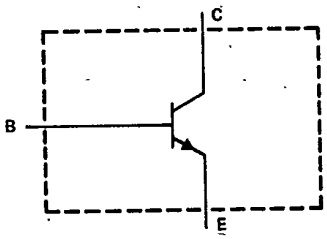

TO-218AA PACKAGE

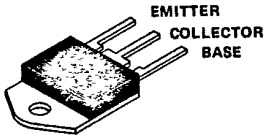

THE COLLECTOR IS IN ELECTRICAL CONTACT WITH THE MOUNTING TAB

absolute maximum ratings at 25°C case temperature (unless otherwise noted)

	TIP3055
Collector-base voltage	100 V
Collector-emitter voltage (see Note 1)	70 V
Emitter-base voltage	7 V
Continuous collector current	15 A
Continuous base current	7 A
Safe operating region at (or below) 25°C case temperature	See Figure 4
Continuous device dissipation at (or below) 25°C case temperature (see Note 2)	90 W
Continuous device dissipation at (or below) 25°C free-air temperature (see Note 3)	3.5 W
Unclamped inductive load energy (see Note 4)	62.5 mJ
Operating collector junction and storage temperature range	−65°C to 150°C
Lead temperature 3,2 mm (0.125 inch) from case for 10 seconds	260°C

NOTES: 1. This value applies when the base-emitter resistance R_{BE} = 100 Ω.
2. Derate linearly to 150°C case temperature at the rate of 0.72 W/°C.
3. Derate linearly to 150°C free-air temperature at the rate of 28 mW/°C.
4. This rating is based on the capability of the transistor to operate safely in the circuit of Figure 2. L = 20 mH, R_{BB2} = 200 Ω, V_{BB2} = 0 V, R_S = 0.1 Ω, V_{CC} = −10 V. Energy = $I_C^2L/2$.

TIP3055
N-P-N SILICON POWER TRANSISTOR

T-33-13

electrical characteristics at 25°C case temperature (unless otherwise noted)

PARAMETER	TEST CONDITIONS			MIN	TYP	MAX	UNIT
$V_{(BR)CEO}$	I_C = 30 mA,	I_B = 0	See Note 5	60			V
I_{CER}	V_{CE} = 70 V,	R_{BE} = 100 Ω				1	mA
I_{CEO}	V_{CE} = 30 V,	I_B = 0				0.7	mA
I_{CEV}	V_{CE} = 100 V,	V_{BE} = −1.5 V				5	mA
I_{EBO}	V_{EB} = 7 V,	I_C = 0				5	mA
h_{FE}	V_{CE} = 4 V,	I_C = 4 A,	See Notes 5 and 6	20		70	
	V_{CE} = 4 V,	I_C = 10 A,	See Notes 5 and 6	5			
V_{BE}	V_{CE} = 4 V,	I_C = 4 A,	See Notes 5 and 6			1.8	V
$V_{CE(sat)}$	I_B = 0.4 A,	I_C = 4 A,	See Notes 5 and 6			1.1	V
	I_B = 3.3 A,	I_C = 10 A,	See Notes 5 and 6			3	
h_{fe}	V_{CE} = 10 V,	I_C = 1 A,	f = 1 kHz	15			
$\|h_{fe}\|$	V_{CE} = 10 V,	I_C = 0.5 A,	f = 1 MHz	3			MHz

NOTES: 5. These parameters must be measured using pulse techniques, t_w = 300 μs, duty cycle ≤ 2%.
6. These parameters are measured with voltage-sensing contacts separate from the current-carrying contacts and located within 3,2 mm (0.125 inch) from the device body.

thermal characteristics

PARAMETER	MIN	TYP	MAX	UNIT
$R_{\theta JC}$			1.39	°C/W
$R_{\theta JA}$			35.7	°C/W

resistive-load switching characteristics

PARAMETER	TEST CONDITIONS†			MIN	TYP	MAX	UNIT
t_{on}	I_C = 6 A,	$I_{B(1)}$ = 0.6 A,	$I_{B(2)}$ = −0.6 A,		0.6		μs
t_{off}	$V_{BE(off)}$ = −4 V,	R_L = 5 Ω,	See Figure 1		1		μs

† Voltage and current values shown are nominal; exact values vary slightly with transistor parameters.

TEXAS INSTRUMENTS
POST OFFICE BOX 225012 • DALLAS, TEXAS 75265

TIP3055
N-P-N SILICON POWER TRANSISTOR

T-33-13

PARAMETER MEASUREMENT INFORMATION

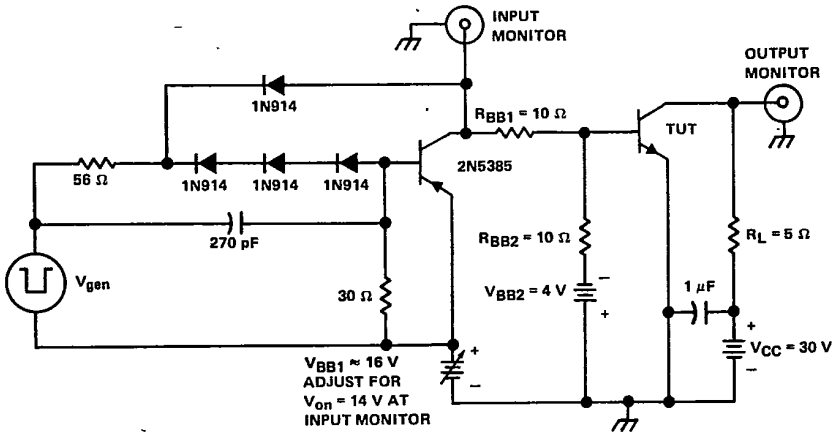

TEST CIRCUIT

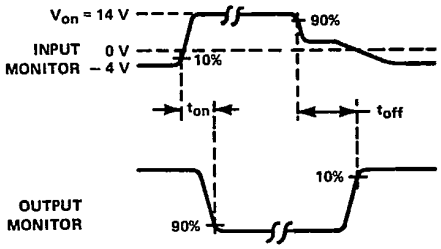

VOLTAGE WAVEFORMS

NOTES: A. V_{gen} is a −30-V pulse into a 50 Ω termination.
B. The V_{gen} waveform is supplied by a generator with the following characteristics: $t_r \leq 15$ ns, $t_f \leq 15$ ns, $Z_{out} = 50\ \Omega$, $t_w = 20\ \mu s$.
C. Waveforms are monitored on an oscilloscope with the following characteristics: $t_r \leq 15$ ns, $R_{in} \geq 10\ M\Omega$, $C_{in} \leq 11.5$ pF.
D. Resistors must be noninductive types.
E. The d-c power supplies may require additional bypassing in order to minimize ringing.

FIGURE 1. RESISTIVE-LOAD SWITCHING

TIP3055
N-P-N SILICON POWER TRANSISTOR

PARAMETER MEASUREMENT INFORMATION

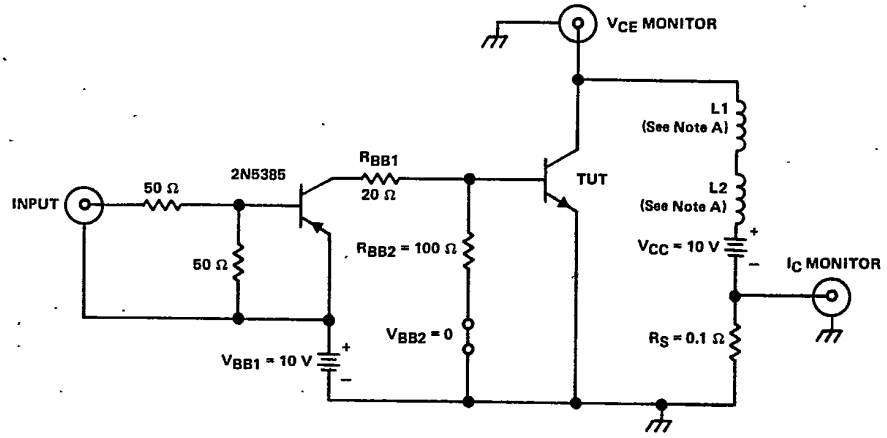

TEST CIRCUIT

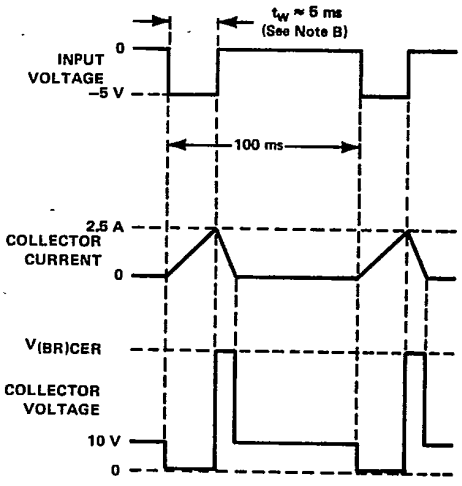

VOLTAGE AND CURRENT WAVEFORMS

NOTES: A. L1 and L2 are 10 mH, 0.11 Ω. Chicago Standard Transformer Corporation C-2688, or equivalent.
B. Input pulse duration is increased until I_{CM} = 2.5 A.

FIGURE 2. INDUCTIVE-LOAD SWITCHING

TEXAS INSTRUMENTS
POST OFFICE BOX 225012 • DALLAS, TEXAS 75265

1283

TIP3055
N-P-N POWER TRANSISTOR

T-33-13

TYPICAL CHARACTERISTICS

STATIC FORWARD CURRENT TRANSFER RATIO
vs
COLLECTOR CURRENT

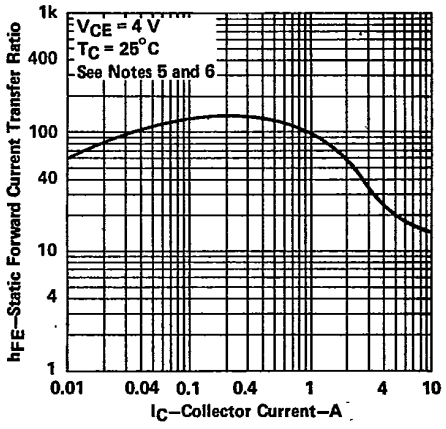

FIGURE 3

NOTES: 5. These parameters must be measured using pulse techniques, t_w = 300 μs, duty cycle ≤ 2%.
6. These parameters are measured with voltage-sensing contacts separate from the current-carrying contacts and located within 3,2 mm (0.125 inch) from the device body.

MAXIMUM SAFE OPERATING AREA

FORWARD-BIAS SAFE OPERATING AREA

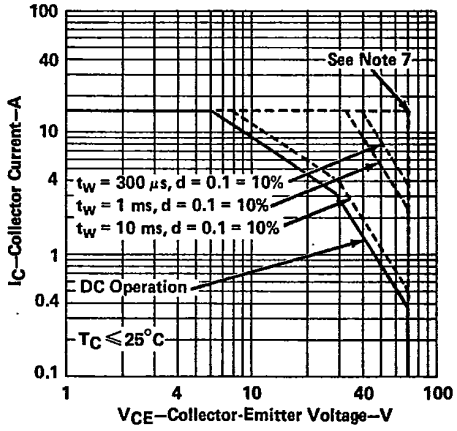

FIGURE 4

NOTE 7: This combination of maximum voltage and current may be achieved only when switching from saturation to cutoff with a clamped inductive load.

T-33-13

TIP3055
N-P-N SILICON POWER TRANSISTOR

THERMAL INFORMATION

DISSIPATION DERATING CURVE

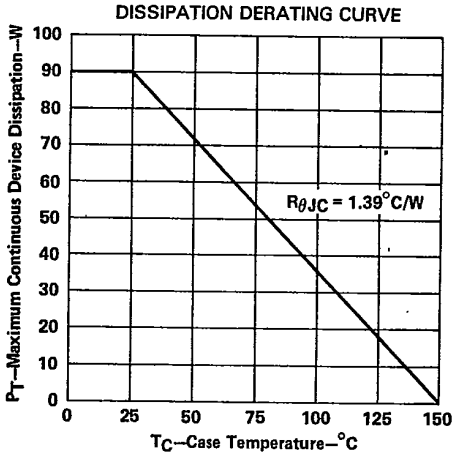

FIGURE 5

TEXAS INSTRUMENTS
POST OFFICE BOX 225012 • DALLAS, TEXAS 75265

This datasheet has been downloaded from:

www.DatasheetCatalog.com

Datasheets for electronic components.

Texas Instruments

http://www.ti.com

This file is the datasheet for the following electronic components:

TIP3055 - http://www.ti.com/product/tip3055?HQS=TI-null-null-dscatalog-df-pf-null-wwe