MOTOROLA

TL081C,AC
TL082C,AC
TL084C,AC

JFET Input Operational Amplifiers

JFET INPUT OPERATIONAL AMPLIFIERS

SEMICONDUCTOR TECHNICAL DATA

These low–cost JFET input operational amplifiers combine two state–of–the–art linear technologies on a single monolithic integrated circuit. Each internally compensated operational amplifier has well matched high voltage JFET input devices for low input offset voltage. The BIFET technology provides wide bandwidths and fast slew rates with low input bias currents, input offset currents, and supply currents.

These devices are available in single, dual and quad operational amplifiers which are pin–compatible with the industry standard MC1741, MC1458, and the MC3403/LM324 bipolar products.

- Input Offset Voltage Options of 6.0 mV and 15 mV Max
- Low Input Bias Current: 30 pA
- Low Input Offset Current: 5.0 pA
- Wide Gain Bandwidth: 4.0 MHz
- High Slew Rate: 13 V/μs
- Low Supply Current: 1.4 mA per Amplifier
- High Input Impedance: 10^{12} Ω

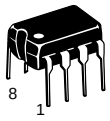

P SUFFIX
PLASTIC PACKAGE
CASE 626



D SUFFIX
PLASTIC PACKAGE
CASE 751
(SO–8)

PIN CONNECTIONS

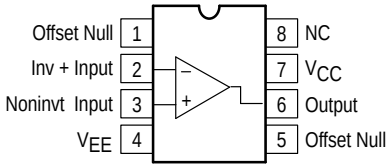

TL081 (Top View)

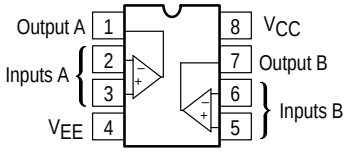

TL082 (Top View)

ORDERING INFORMATION

Op Amp Function	Device	Operating Temperature Range	Package
Single	TL081CD	T_A = 0° to +70°C	SO–8
	TL081ACP		Plastic DIP
Dual	TL082CD	T_A = 0° to +70°C	SO–8
	TL082ACP		Plastic DIP
Quad	TL084CN, ACN	T_A = 0° to +70°C	Plastic DIP

Representative Circuit Schematic (Each Amplifier)

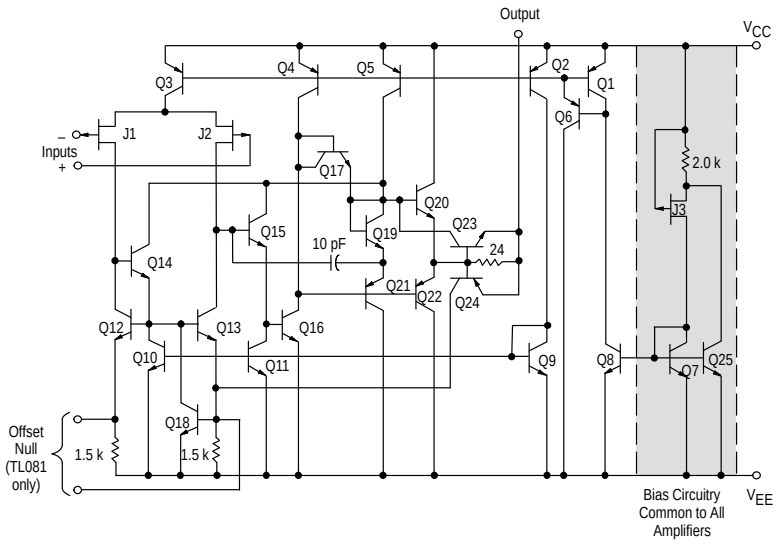

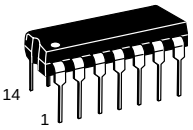

N SUFFIX
PLASTIC PACKAGE
CASE 646

PIN CONNECTIONS

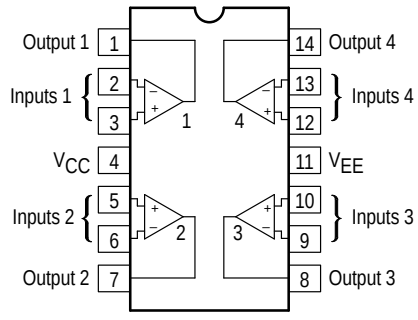

TL084 (Top View)

© Motorola, Inc. 1997

MAXIMUM RATINGS

Rating	Symbol	Value	Unit
Supply Voltage	V_{CC} V_{EE}	18 –18	V
Differential Input Voltage	V_{ID}	±30	V
Input Voltage Range (Note 1)	V_{IDR}	±15	V
Output Short Circuit Duration (Note 2)	t_{SC}	Continuous	
Power Dissipation Plastic Package (N, P) Derate above T_A = +47°C	 P_D $1/\theta_{JA}$	 680 10	 mW mW/°C
Operating Ambient Temperature Range	T_A	0 to +70	°C
Storage Temperature Range	T_{stg}	–65 to +150	°C

NOTES: 1. The magnitude of the input voltage must not exceed the magnitude of the supply voltage or 15 V, whichever is less.
2. The output may be shorted to ground or either supply. Temperature and/or supply voltages must be limited to ensure that power dissipation ratings are not exceeded.
3. ESD data available upon request.

ELECTRICAL CHARACTERISTICS (V_{CC} = 15 V, V_{EE} = –15 V, T_A = T_{low} to T_{high} [Note 1].)

Characteristics	Symbol	Min	Typ	Max	Unit
Input Offset Voltage ($R_S \le 10$ k, V_{CM} = 0) TL081C, TL082C TL084C TL08_AC	V_{IO}	 – – –	 – – –	 20 20 7.5	mV
Input Offset Current (V_{CM} = 0) (Note 2) TL08_C TL08_AC	I_{IO}	 – –	 – –	 5.0 3.0	nA
Input Bias Current (V_{CM} = 0) (Note 2) TL08_C TL08_AC	I_{IB}	 – –	 – –	 10 7.0	nA
Large–Signal Voltage Gain (V_O= ±10 V,$R_L \ge 2.0$ k) TL08_C TL08_AC	A_{VOL}	 15 25	 – –	 – –	V/mV
Output Voltage Swing (Peak–to–Peak) ($R_L \ge 10$ k) ($R_L \ge 2.0$ k)	V_O	 24 20	 – –	 – –	V

NOTES: 1. T_{low} = 0°C for TL081AC,C TL082AC,C TL084AC,C T_{high} = 70°C for TL081AC TL082AC,C TL084AC,C
2. Input Bias currents of JFET input op amps approximately double for every 10°C rise in Junction Temperature as shown in Figure 3. To maintain junction temperature as close to ambient temperature as possible, pulse techniques must be used during testing.

Figure 1. Unity Gain Voltage Follower

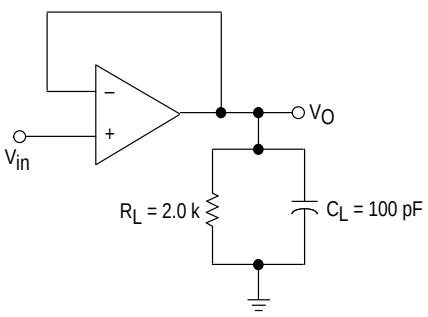

Figure 2. Inverting Gain of 10 Amplifier

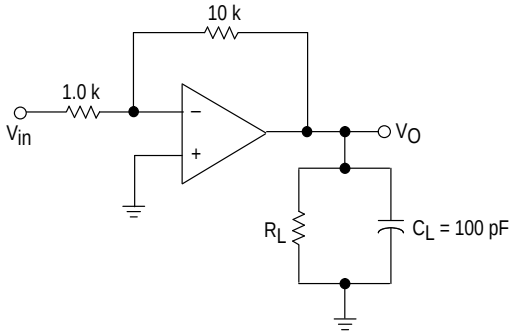

ELECTRICAL CHARACTERISTICS (V_{CC} = 15 V, V_{EE} = –15 V, T_A = 25°C, unless otherwise noted.)

Characteristics	Symbol	Min	Typ	Max	Unit
Input Offset Voltage ($R_S \le 10$ k, V_{CM} = 0)	V_{IO}				mV
TL081C, TL082C		–	5.0	15	
TL084C		–	5.0	15	
TL08_AC		–	3.0	6.0	
Average Temperature Coefficient of Input Offset Voltage R_S = 50 Ω, $T_A = T_{low}$ to T_{high} (Note 1)	$\Delta V_{IO}/\Delta T$	–	10	–	μV/°C
Input Offset Current (V_{CM} = 0) (Note 2)	I_{IO}				pA
TL08_C		–	5.0	200	
TL08_AC		–	5.0	100	
Input Bias Current (V_{CM} = 0) (Note 2)	I_{IB}				pA
TL08_C		–	30	400	
TL08_AC		–	30	200	
Input Resistance	r_i	–	10^{12}	–	Ω
Common Mode Input Voltage Range	V_{ICR}				V
TL08_C		±10	15, –12	–	
TL08_AC		±11	15, –12	–	
Large Signal Voltage Gain (V_O = ±10 V, $R_L \ge 2.0$ k)	A_{VOL}				V/mV
TL08_C		25	150	–	
TL08_AC		50	150	–	
Output Voltage Swing (Peak–to–Peak) (R_L = 10 k)	V_O	24	28	–	V
Common Mode Rejection Ratio ($R_S \le 10$ k)	CMRR				dB
TL08_C		70	100	–	
TL08_AC		80	100	–	
Supply Voltage Rejection Ratio ($R_S \le 10$ k)	PSRR				dB
TL08_C		70	100	–	
TL08_AC		80	100	–	
Supply Current (Each Amplifier)	I_D	–	1.4	2.8	mA
Unity Gain Bandwidth	BW	–	4.0	–	MHz
Slew Rate (See Figure 1) V_{in} = 10 V, R_L = 2.0 k, C_L = 100 pF	SR	–	13	–	V/μs
Rise Time (See Figure 1)	t_r	–	0.1	–	μs
Overshoot (V_{in} = 20 mV, R_L = 2.0 k, C_L = 100 pF)	OS	–	10	–	%
Equivalent Input Noise Voltage R_S = 100 Ω, f = 1000 Hz	e_n	–	25	–	$nV/\sqrt{Hz}$
Channel Separation A_V = 100	CS	–	120	–	dB

NOTES: 1. T_{low} = 0°C for TL081AC,C TL082AC,C TL084AC,C T_{high} = 70°C for TL081AC TL082AC,C TL084AC,C

2. Input Bias currents of JFET input op amps approximately double for every 10°C rise in Junction Temperature as shown in Figure 3. To maintain junction temperature as close to ambient temperature as possible, pulse techniques must be used during testing.

Figure 3. Input Bias Current versus Temperature

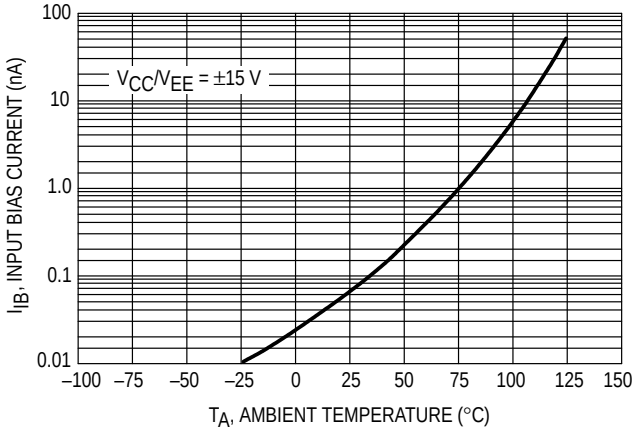

Figure 4. Output Voltage Swing versus Frequency

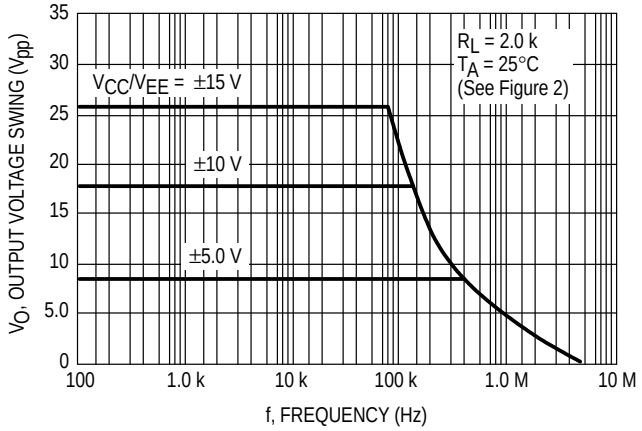

Figure 5. Output Voltage Swing versus Load Resistance

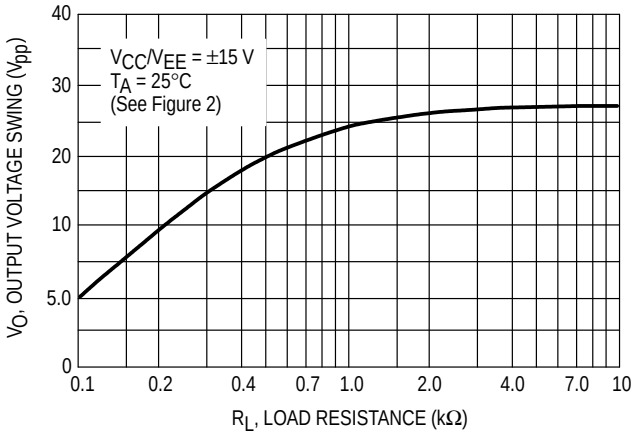

Figure 6. Output Voltage Swing versus Supply Voltage

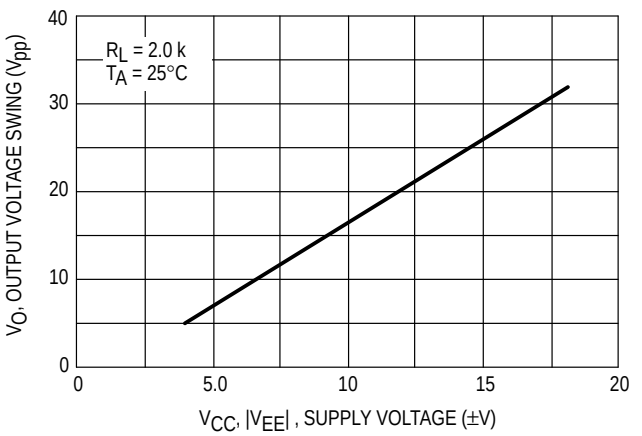

Figure 7. Output Voltage Swing versus Temperature

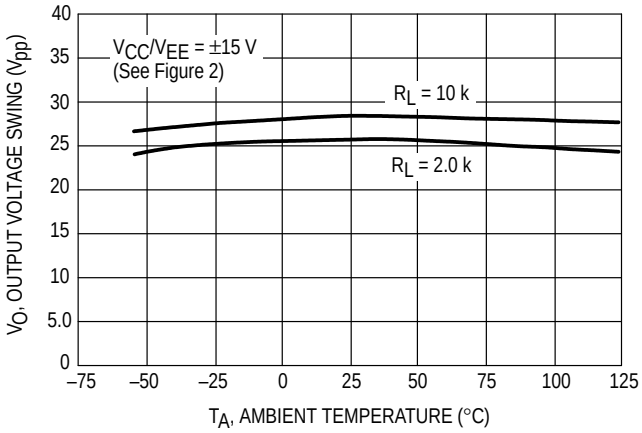

Figure 8. Supply Current per Amplifier versus Temperature

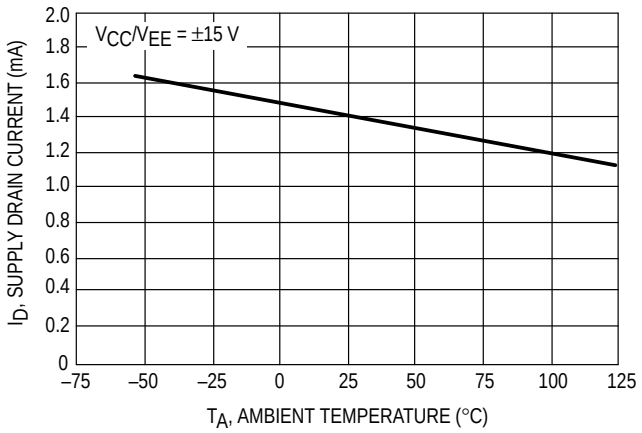

Figure 9. Large Signal Voltage Gain and Phase Shift versus Frequency

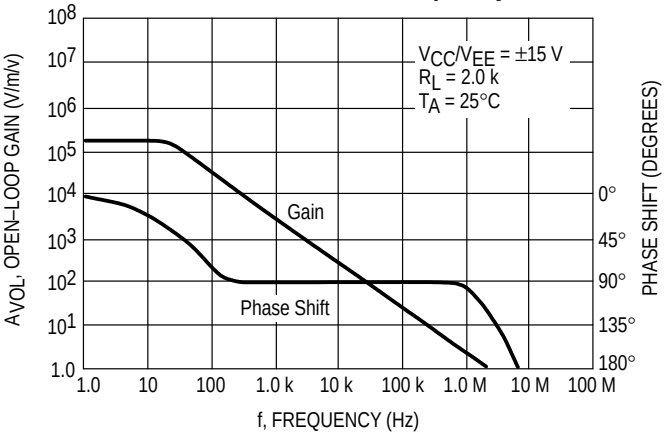

Figure 10. Large Signal Voltage Gain versus Temperature

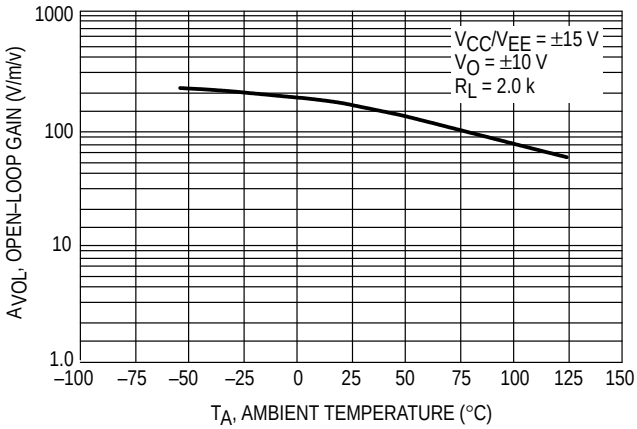

Figure 11. Normalized Slew Rate versus Temperature

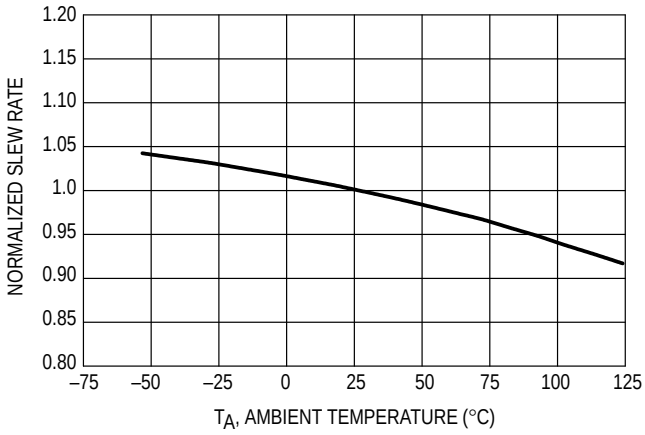

Figure 12. Equivalent Input Noise Voltage versus Frequency

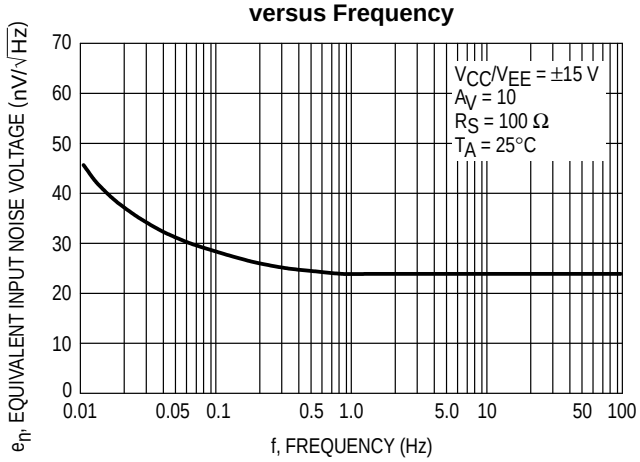

Figure 13. Total Harmonic Distortion versus Frequency

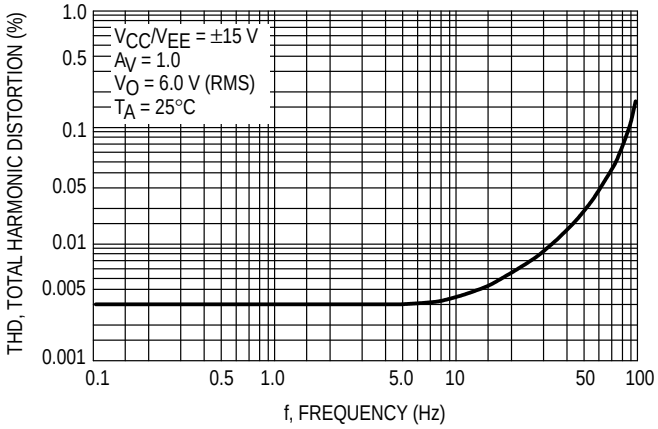

Figure 14. Positive Peak Detector

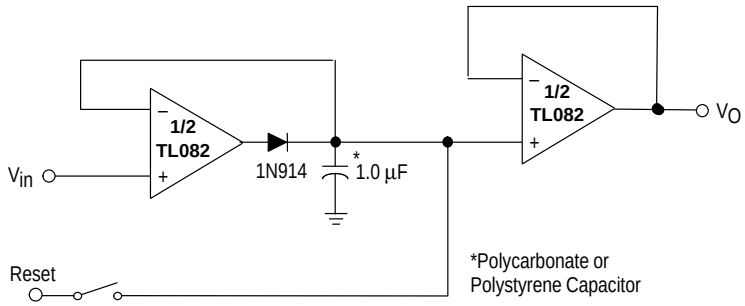

Figure 15. Voltage Controlled Current Source

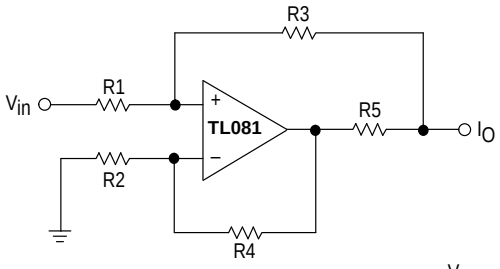

If R1 through R4 > > R5 then $I_{out} = \frac{V_{in}}{R5}$

Figure 16. Long Interval RC Timer

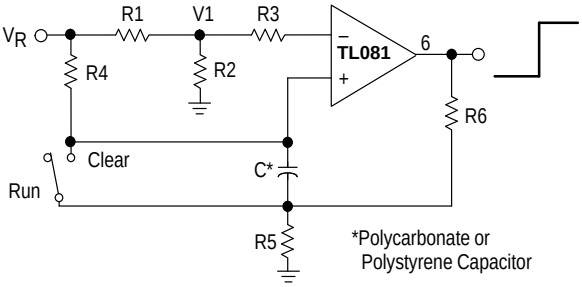

Time (t) = R4 Cℓn ($V_R/V_R–V_I$), $R_3 = R_4$, $R_5 = 0.1\ R_6$
If R1 = R2: t = 0.693 R4C

Design Example: 100 Second Timer
V_R = 10 V C = I.0 mF R3 = R4 = 144 M
R6 = 20 k R5 = 2.0 k R1 = R2 = 1.0 k

Figure 17. Isolating Large Capacitive Loads

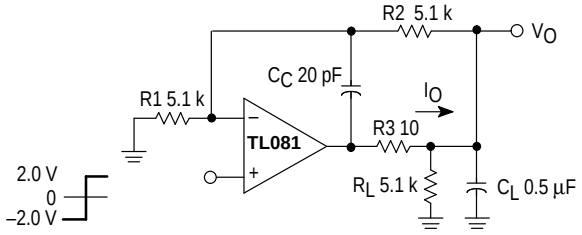

- Overshoot < 10%
- t_s = 10 µs
- When driving large C_L, the V_O slew rate is determined by C_L and $I_{O(max)}$:

$$\frac{\Delta V_O}{\Delta t} = \frac{I_O}{C_L} \cong \frac{0.02}{0.5}\ \text{V/µs} = 0.04\ \text{V/µs (with } C_L \text{ shown)}$$

OUTLINE DIMENSIONS

P SUFFIX
PLASTIC PACKAGE
CASE 626–05
ISSUE K

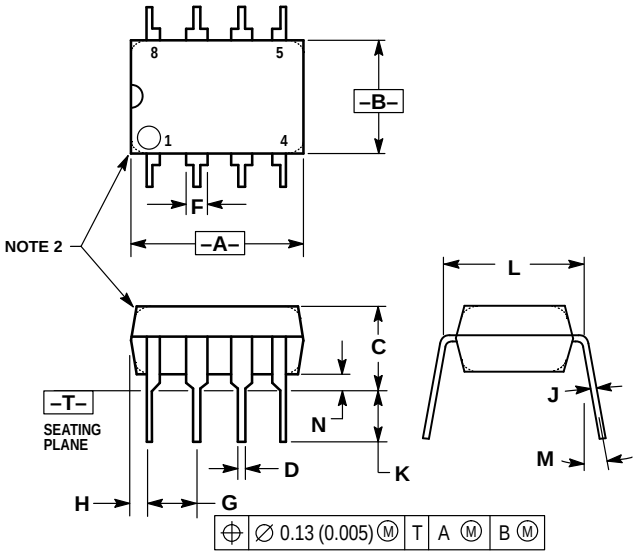

NOTES:
1. DIMENSION L TO CENTER OF LEAD WHEN FORMED PARALLEL.
2. PACKAGE CONTOUR OPTIONAL (ROUND OR SQUARE CORNERS).
3. DIMENSIONING AND TOLERANCING PER ANSI Y14.5M, 1982.

	MILLIMETERS		INCHES	
DIM	MIN	MAX	MIN	MAX
A	9.40	10.16	0.370	0.400
B	6.10	6.60	0.240	0.260
C	3.94	4.45	0.155	0.175
D	0.38	0.51	0.015	0.020
F	1.02	1.78	0.040	0.070
G	2.54 BSC		0.100 BSC	
H	0.76	1.27	0.030	0.050
J	0.20	0.30	0.008	0.012
K	2.92	3.43	0.115	0.135
L	7.62 BSC		0.300 BSC	
M	—	10°	—	10°
N	0.76	1.01	0.030	0.040

D SUFFIX
PLASTIC PACKAGE
CASE 751–05
(SO–8)
ISSUE S

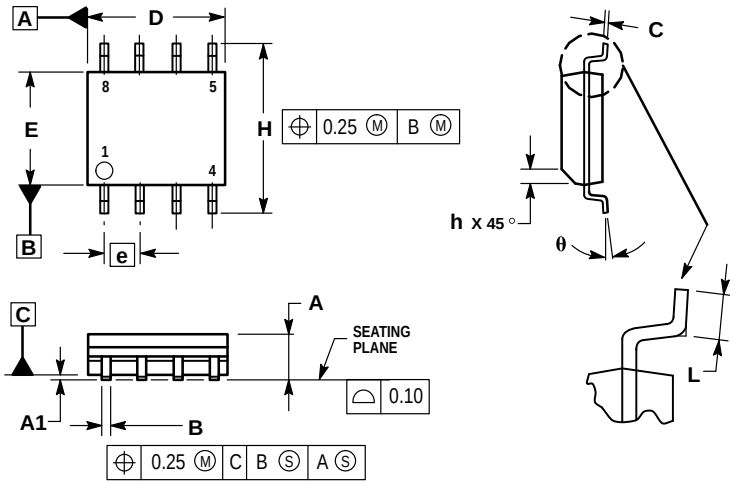

NOTES:
1. DIMENSIONING AND TOLERANCING PER ASME Y14.5M, 1994.
2. DIMENSIONS ARE IN MILLIMETERS.
3. DIMENSION D AND E DO NOT INCLUDE MOLD PROTRUSION.
4. MAXIMUM MOLD PROTRUSION 0.15 PER SIDE.
5. DIMENSION B DOES NOT INCLUDE MOLD PROTRUSION. ALLOWABLE DAMBAR PROTRUSION SHALL BE 0.127 TOTAL IN EXCESS OF THE B DIMENSION AT MAXIMUM MATERIAL CONDITION.

	MILLIMETERS	
DIM	MIN	MAX
A	1.35	1.75
A1	0.10	0.25
B	0.35	0.49
C	0.18	0.25
D	4.80	5.00
E	3.80	4.00
e	1.27 BSC	
H	5.80	6.20
h	0.25	0.50
L	0.40	1.25
θ	0°	7°

OUTLINE DIMENSIONS

N SUFFIX
PLASTIC PACKAGE
CASE 646–06
ISSUE M

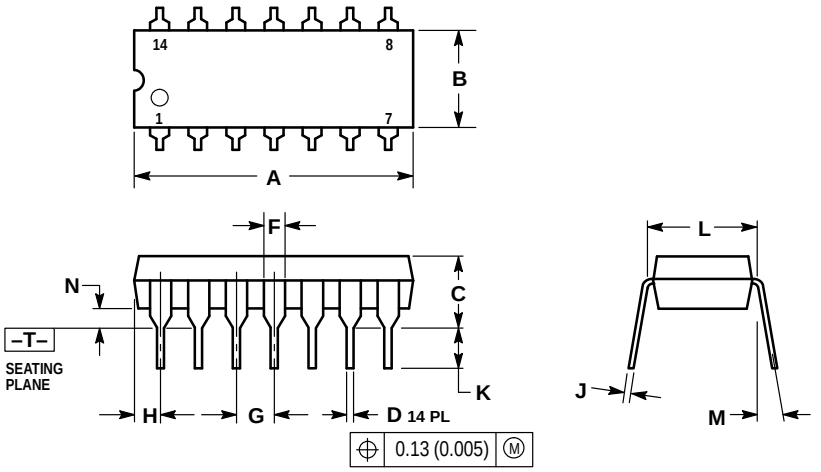

NOTES:
1. DIMENSIONING AND TOLERANCING PER ANSI Y14.5M, 1982.
2. CONTROLLING DIMENSION: INCH.
3. DIMENSION L TO CENTER OF LEADS WHEN FORMED PARALLEL.
4. DIMENSION B DOES NOT INCLUDE MOLD FLASH.
5. ROUNDED CORNERS OPTIONAL.

	INCHES		MILLIMETERS	
DIM	MIN	MAX	MIN	MAX
A	0.715	0.770	18.16	18.80
B	0.240	0.260	6.10	6.60
C	0.145	0.185	3.69	4.69
D	0.015	0.021	0.38	0.53
F	0.040	0.070	1.02	1.78
G	0.100 BSC		2.54 BSC	
H	0.052	0.095	1.32	2.41
J	0.008	0.015	0.20	0.38
K	0.115	0.135	2.92	3.43
L	0.290	0.310	7.37	7.87
M	—	10°	—	10°
N	0.015	0.039	0.38	1.01

Motorola reserves the right to make changes without further notice to any products herein. Motorola makes no warranty, representation or guarantee regarding the suitability of its products for any particular purpose, nor does Motorola assume any liability arising out of the application or use of any product or circuit, and specifically disclaims any and all liability, including without limitation consequential or incidental damages. “Typical” parameters which may be provided in Motorola data sheets and/or specifications can and do vary in different applications and actual performance may vary over time. All operating parameters, including “Typicals” must be validated for each customer application by customer’s technical experts. Motorola does not convey any license under its patent rights nor the rights of others. Motorola products are not designed, intended, or authorized for use as components in systems intended for surgical implant into the body, or other applications intended to support or sustain life, or for any other application in which the failure of the Motorola product could create a situation where personal injury or death may occur. Should Buyer purchase or use Motorola products for any such unintended or unauthorized application, Buyer shall indemnify and hold Motorola and its officers, employees, subsidiaries, affiliates, and distributors harmless against all claims, costs, damages, and expenses, and reasonable attorney fees arising out of, directly or indirectly, any claim of personal injury or death associated with such unintended or unauthorized use, even if such claim alleges that Motorola was negligent regarding the design or manufacture of the part. Motorola and Ⓜ are registered trademarks of Motorola, Inc. Motorola, Inc. is an Equal Opportunity/Affirmative Action Employer.

Mfax is a trademark of Motorola, Inc.

How to reach us:
USA / EUROPE / Locations Not Listed: Motorola Literature Distribution;
P.O. Box 5405, Denver, Colorado 80217. 1–303–675–2140 or 1–800–441–2447

JAPAN: Nippon Motorola Ltd.: SPD, Strategic Planning Office, 4–32–1, Nishi–Gotanda, Shinagawa–ku, Tokyo 141, Japan. 81–3–5487–8488

Customer Focus Center: 1–800–521–6274

Mfax™: RMFAX0@email.sps.mot.com – TOUCHTONE 1–602–244–6609
Motorola Fax Back System – US & Canada ONLY 1–800–774–1848
– http://sps.motorola.com/mfax/

ASIA / PACIFIC: Motorola Semiconductors H.K. Ltd.; 8B Tai Ping Industrial Park, 51 Ting Kok Road, Tai Po, N.T., Hong Kong. 852–26629298

HOME PAGE: http://motorola.com/sps/