SIEMENS

PNP Silicon AF Transistors

BC 327
BC 328

- High current gain
- High collector current
- Low collector-emitter saturation voltage
- Complementary types: BC 337, BC 338 (NPN)

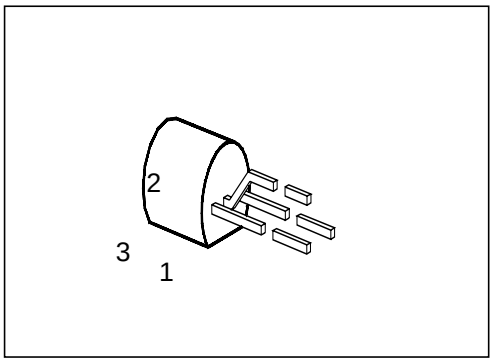

Type	Marking	Ordering Code	Pin Configuration 1	2	3	Package[1)]
BC 327	–	Q62702-C311	C	B	E	TO-92
BC 327-16		Q62702-C311-V3				
BC 327-25		Q62702-C311-V4				
BC 327-40		Q62702-C311-V2				
BC 328		Q62702-C312				
BC 328-16		Q62702-C312-V3				
BC 328-25		Q62702-C312-V4				
BC 328-40		Q62702-C312-V2				

1) For detailed information see chapter Package Outlines.

Maximum Ratings

Parameter	Symbol	Values BC 327	Values BC 328	Unit
Collector-emitter voltage	V_{CE0}	45	25	V
Collector-base voltage	V_{CB0}	50	30	
Emitter-base voltage	V_{EB0}	5		
Collector current	I_C	800		mA
Peak collector current	I_{CM}	1		A
Base current	I_B	100		mA
Peak base current	I_{BM}	200		
Total power dissipation, $T_C = 66$ °C	P_{tot}	625		mW
Junction temperature	T_j	150		°C
Storage temperature range	T_{stg}	– 65 … + 150		

Thermal Resistance

Junction - ambient	$R_{th\ JA}$	≤ 200	K/W
Junction - case[1)]	$R_{th\ JC}$	≤ 135	

1) Mounted on Al heat sink 15 mm × 25 mm × 0.5 mm.

Electrical Characteristics
at T_A = 25 °C, unless otherwise specified.

Parameter	Symbol	Values			Unit
		min.	typ.	max.	
DC characteristics					
Collector-emitter breakdown voltage I_C = 10 mA	$V_{(BR)CE0}$				V
BC 327		45	–	–	
BC 328		25	–	–	
Collector-base breakdown voltage I_C = 100 µA	$V_{(BR)CB0}$				
BC 327		50	–	–	
BC 328		30	–	–	
Emitter-base breakdown voltage I_E = 10 µA	$V_{(BR)EB0}$	5	–	–	
Collector cutoff current	I_{CB0}				
V_{CB} = 25 V, BC 328		–	–	100	nA
V_{CB} = 45 V, BC 327		–	–	100	nA
V_{CB} = 25 V, T_A = 150 °C, BC 328		–	–	10	µA
V_{CB} = 45 V, T_A = 150 °C, BC 327		–	–	10	µA
Emitter cutoff current V_{EB} = 4 V	I_{EB0}	–	–	100	nA
DC current gain[1] I_C = 100 mA; V_{CE} = 1 V	h_{FE}				–
BC 327/16; BC 328/16		100	160	250	
BC 327/25; BC 328/25		160	250	400	
BC 327/40; BC 328/40		250	350	630	
I_C = 300 mA; V_{CE} = 1 V					
BC 327/16; BC 328/16		60	–	–	
BC 327/25; BC 328/25		100	–	–	
BC 327/40; BC 328/40		170	–	–	
Collector-emitter saturation voltage[1] I_C = 500 mA; I_B = 50 mA	V_{CEsat}	–	–	0.7	V
Base-emitter saturation voltage[1] I_C = 500 mA; I_B = 50 mA	V_{BEsat}	–	–	2	

[1] Pulse test: $t \leq 300$ µs, $D \leq 2$ %.

Electrical Characteristics
at T_A = 25 °C, unless otherwise specified.

Parameter	Symbol	Values			Unit
		min.	typ.	max.	
AC characteristics					
Transition frequency I_C = 50 mA, V_{CE} = 5 V, f = 20 MHz	f_T	–	200	–	MHz
Output capacitance V_{CB} = 10 V, f = 1 MHz	C_{obo}	–	12	–	pF
Input capacitance V_{EB} = 0.5 V, f = 1 MHz	C_{ibo}	–	60	–	

Total power dissipation $P_{tot} = f(T_A; T_C)$

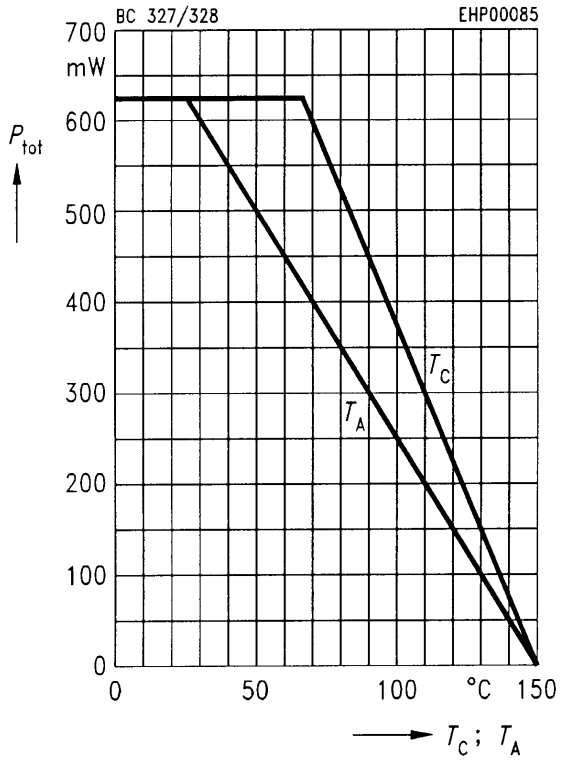

Permissible pulse load $R_{thJA} = f(t_p)$

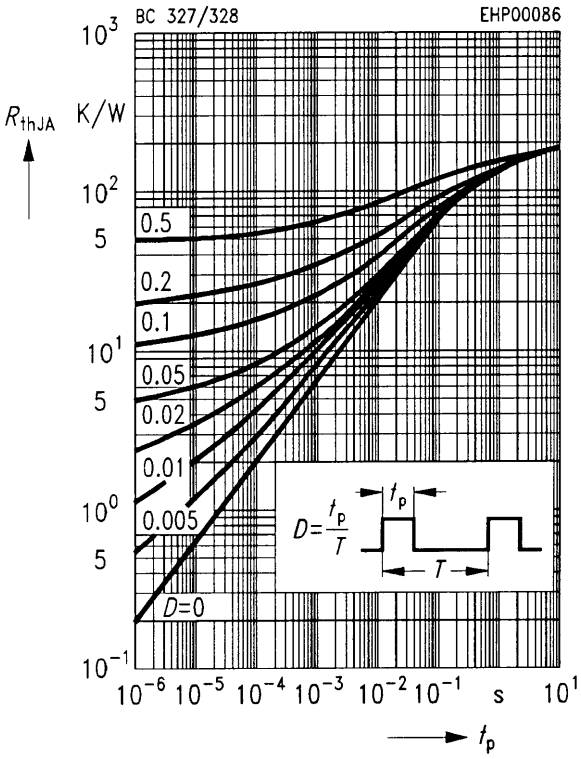

Collector current $I_C = f(V_{BE})$
V_{CE} = 1 V

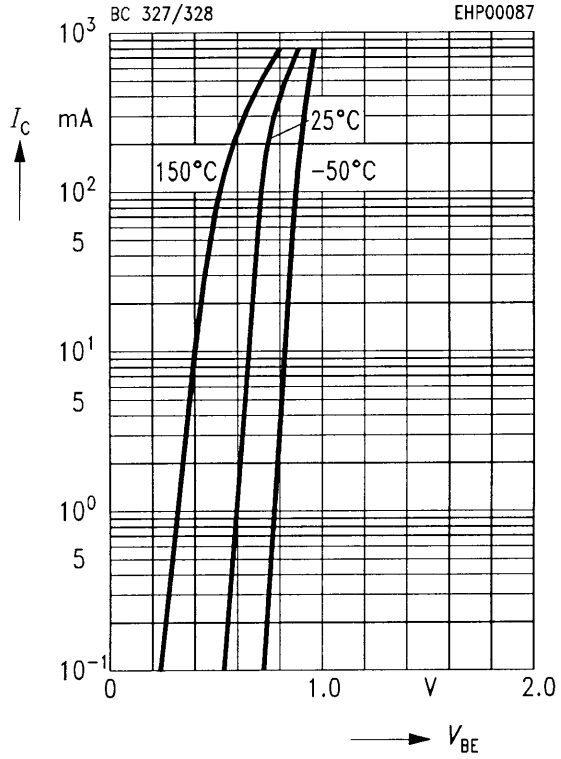

Collector cutoff current $I_{CB0} = f(T_A)$
V_{CB} = 45 V

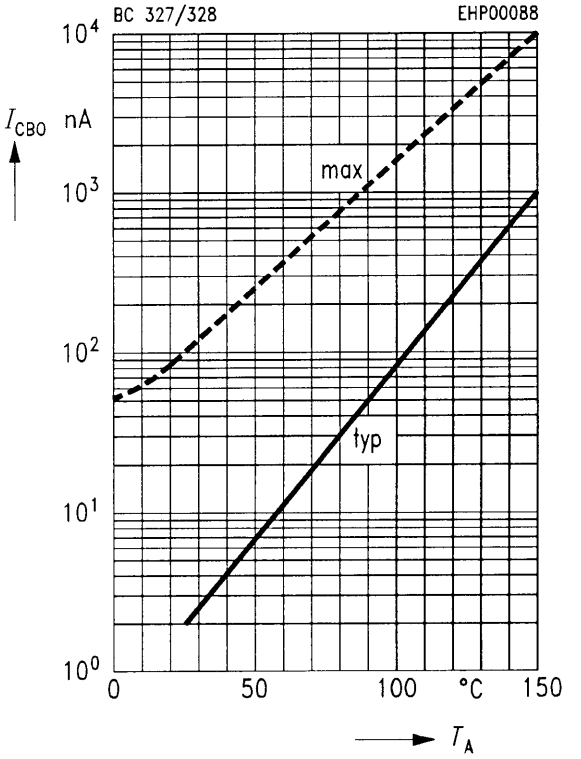

DC current gain $h_{FE} = f(I_C)$
V_{CE} = 1 V

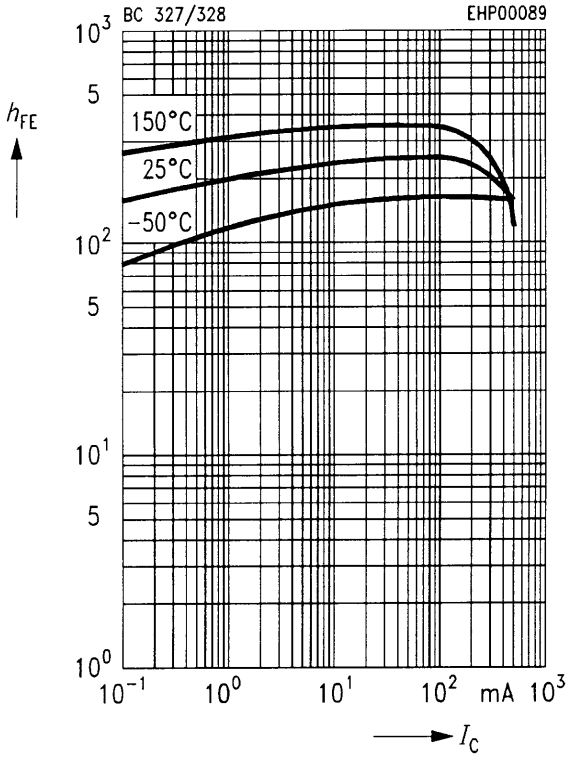

Transition frequency $f_T = f(I_C)$
f = 20 MHz, T_A = 25 °C

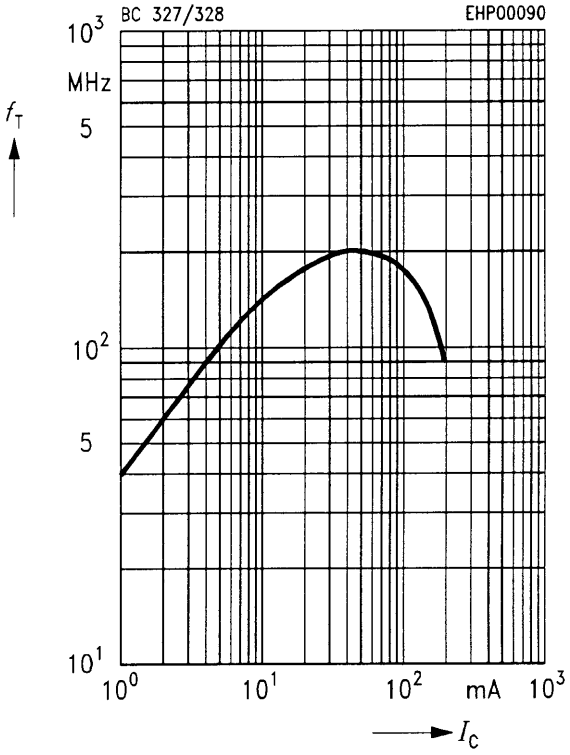

Collector-emitter saturation voltage
$V_{CEsat} = f(I_C)$
h_{FE} = 10

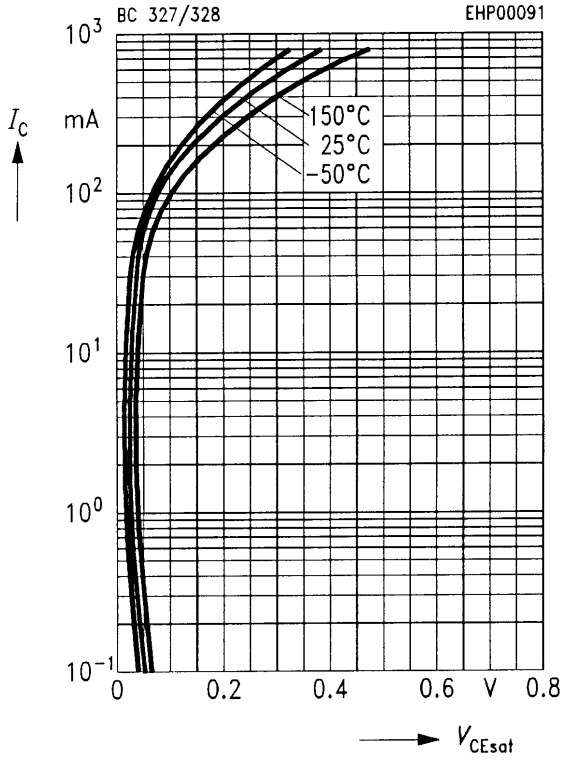

Base-emitter saturation voltage
$V_{BEsat} = f(I_C)$
h_{FE} = 10

