Silicon NPN Power Transistors TIP31/31A/31B/31C

DESCRIPTION

·With TO-220C package
·Complement to type TIP32/32A/32B/32C

APPLICATIONS

·Medium power linear switching applications

PINNING

PIN	DESCRIPTION
1	Base
2	Collector;connected to mounting base
3	Emitter



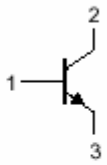

Fig.1 simplified outline (TO-220C) and symbol

ABSOLUTE MAXIMUM RATINGS(T_C=25□)

SYMBOL	PARAMETER		CONDITIONS	VALUE	UNIT
V_{CBO}	Collector-base voltage	TIP31	Open emitter	40	V
		TIP31A		60	
		TIP31B		80	
		TIP31C		100	
V_{CEO}	Collector-emitter voltage	TIP31	Open base	40	V
		TIP31A		60	
		TIP31B		80	
		TIP31C		100	
V_{EBO}	Emitter-base voltage		Open collector	5	V
I_C	Collector current (DC)			3	A
I_{CM}	Collector current-Pulse			5	A
I_B	Base current			1	A
P_C	Collector power dissipation		T_C=25□	40	w
			T_a=25□	2	
T_j	Junction temperature			150	□
T_{stg}	Storage temperature			-65~150	□

CHARACTERISTICS

Tj=25□ unless otherwise specified

SYMBOL	PARAMETER		CONDITIONS	MIN	TYP.	MAX	UNIT
$V_{CEO(SUS)}$	Collector-emitter sustaining voltage	TIP31	I_C=30mA; I_B=0	40			V
		TIP31A		60			
		TIP31B		80			
		TIP31C		100			
$V_{CE(sat)}$	Collector-emitter saturation voltage		I_C=3A I_B=0.375A			1.2	V
V_{BE}	Base-emitter on voltage		I_C=3A ; V_{CE}=4V			1.8	V
I_{CES}	Collector cut-off current	TIP31	V_{CE}=40V; V_{EB}=0			0.2	mA
		TIP31A	V_{CE}=60V; V_{EB}=0				
		TIP31B	V_{CE}=80V; V_{EB}=0				
		TIP31C	V_{CE}=100V; V_{EB}=0				
I_{CEO}	Collector cut-off current	TIP31/31A	V_{CE}=30V; I_B=0			0.3	mA
		TIP31B/31C	V_{CE}=60V; I_B=0				
I_{EBO}	Emitter cut-off current		V_{EB}=5V; I_C=0			1.0	mA
h_{FE-1}	DC current gain		I_C=1A ; V_{CE}=4V	25			
h_{FE-2}	DC current gain		I_C=3A ; V_{CE}=4V	10		50	
f_T	Transition frequency		I_C=0.5A ; V_{CE}=10V	3			MHz

PACKAGE OUTLINE

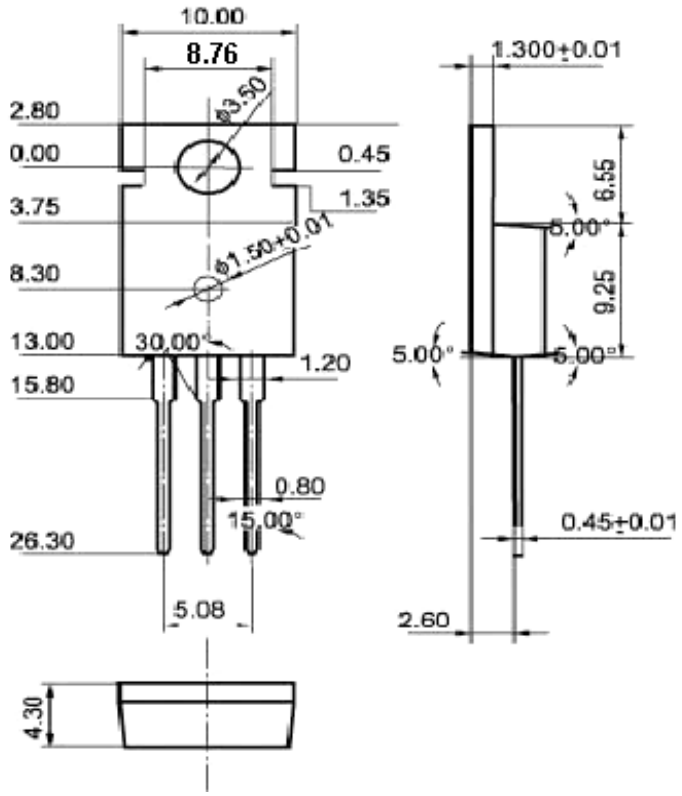

Fig.2 Outline dimensions (unindicated tolerance:±0.10 mm)

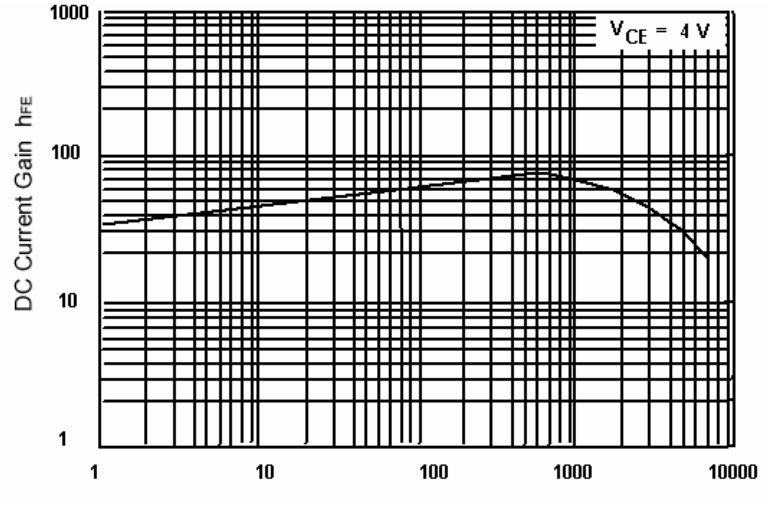

Fig.3 DC current Gain

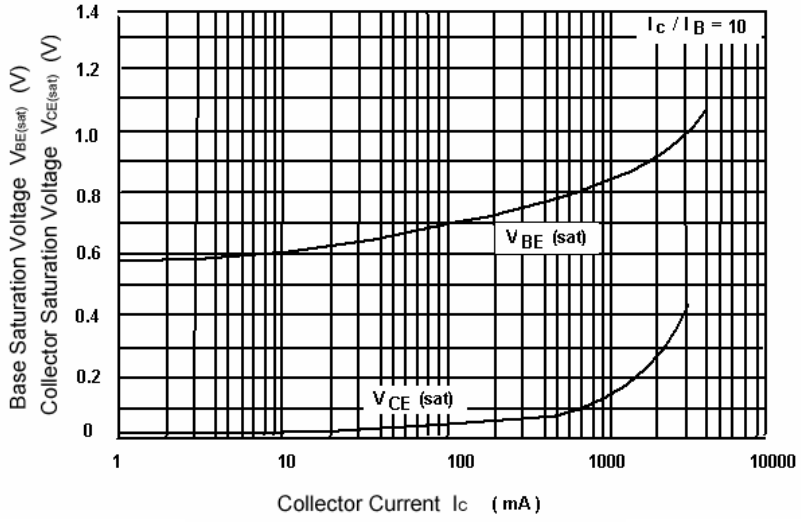

Fig.4 Base-Emitter Saturation Voltage
Collector-Emitter Saturation Voltage

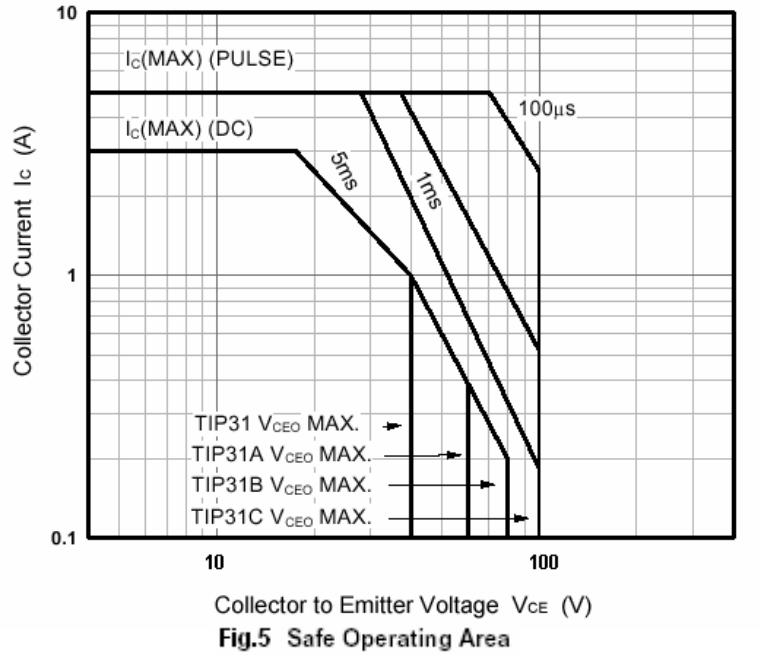

Fig.5 Safe Operating Area