FAIRCHILD SEMICONDUCTOR™

August 1986
Revised March 2000

DM74LS14
Hex Inverter with Schmitt Trigger Inputs

General Description

This device contains six independent gates each of which performs the logic INVERT function. Each input has hysteresis which increases the noise immunity and transforms a slowly changing input signal to a fast changing, jitter free output.

Ordering Code:

Order Number	Package Number	Package Description
DM74LS14M	M14A	14-Lead Small Outline Integrated Circuit (SOIC), JEDEC MS-120, 0.150 Narrow
DM74LS14SJ	M14D	14-Lead Small Outline Package (SOP), EIAJ TYPE II, 5.3mm Wide
DM74LS14N	N14A	14-Lead Plastic Dual-In-Line Package (PDIP), JEDEC MS-001, 0.300 Wide

Devices also available in Tape and Reel. Specify by appending the suffix letter "X" to the ordering code.

Connection Diagram

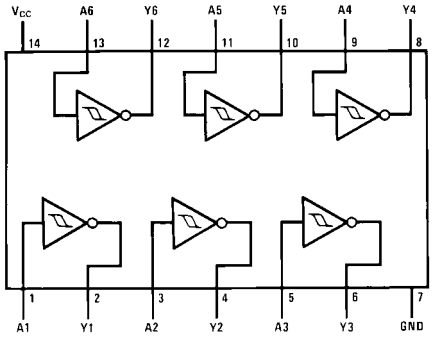

Function Table

$Y = \overline{A}$

Input	Output
A	Y
L	H
H	L

H = HIGH Logic Level
L = LOW Logic Level

© 2000 Fairchild Semiconductor Corporation

Absolute Maximum Ratings(Note 1)

Supply Voltage	7V
Input Voltage	7V
Operating Free Air Temperature Range	0°C to +70°C
Storage Temperature Range	−65°C to +150°C

Note 1: The "Absolute Maximum Ratings" are those values beyond which the safety of the device cannot be guaranteed. The device should not be operated at these limits. The parametric values defined in the Electrical Characteristics tables are not guaranteed at the absolute maximum ratings. The "Recommended Operating Conditions" table will define the conditions for actual device operation.

Recommended Operating Conditions

Symbol	Parameter	Min	Nom	Max	Units
V_{CC}	Supply Voltage	4.75	5	5.25	V
V_{T+}	Positive-Going Input Threshold Voltage (Note 2)	1.4	1.6	1.9	V
V_{T-}	Negative-Going Input Threshold Voltage (Note 2)	0.5	0.8	1	V
HYS	Input Hysteresis (Note 2)	0.4	0.8		V
I_{OH}	HIGH Level Output Current			−0.4	mA
I_{OL}	LOW Level Output Current			8	mA
T_A	Free Air Operating Temperature	0		70	°C

Note 2: V_{CC} = 5V.

Electrical Characteristics

over recommended operating free air temperature range (unless otherwise noted)

Symbol	Parameter	Conditions	Min	Typ (Note 3)	Max	Units
V_I	Input Clamp Voltage	V_{CC} = Min, I_I = −18 mA			−1.5	V
V_{OH}	HIGH Level Output Voltage	V_{CC} = Min, I_{OH} = Max, V_{IL} = Max	2.7	3.4		V
V_{OL}	LOW Level Output Voltage	V_{CC} = Min, I_{OL} = Max, V_{IH} = Min		0.35	0.5	V
		V_{CC} = Min, I_{OL} = 4 mA		0.25	0.4	
I_{T+}	Input Current at Positive-Going Threshold	V_{CC} = 5V, V_I = V_{T+}		−0.14		mA
I_{T-}	Input Current at Negative-Going Threshold	V_{CC} = 5V, V_I = V_{T-}		−0.18		mA
I_I	Input Current @ Max Input Voltage	V_{CC} = Max, V_I = 7V			0.1	mA
I_{IH}	HIGH Level Input Current	V_{CC} = Max, V_I = 2.7V			20	µA
I_{IL}	LOW Level Input Current	V_{CC} = Max, V_I = 0.4V			−0.4	mA
I_{OS}	Short Circuit Output Current	V_{CC} = Max (Note 4)	−20		−100	mA
I_{CCH}	Supply Current with Outputs HIGH	V_{CC} = Max		8.6	16	mA
I_{CCL}	Supply Current with Outputs LOW	V_{CC} = Max		12	21	mA

Note 3: All typicals are at V_{CC} = 5V, T_A = 25°C.

Note 4: Not more than one output should be shorted at a time, and the duration should not exceed one second.

Switching Characteristics

at V_{CC} = 5V and T_A = 25°C

Symbol	Parameter	R_L = 2 kΩ				Units
		C_L = 15 pF		C_L = 50 pF		
		Min	Max	Min	Max	
t_{PLH}	Propagation Delay Time LOW-to-HIGH Level Output	5	22	8	25	ns
t_{PHL}	Propagation Delay Time HIGH-to-LOW Level Output	5	22	10	33	ns

Physical Dimensions inches (millimeters) unless otherwise noted

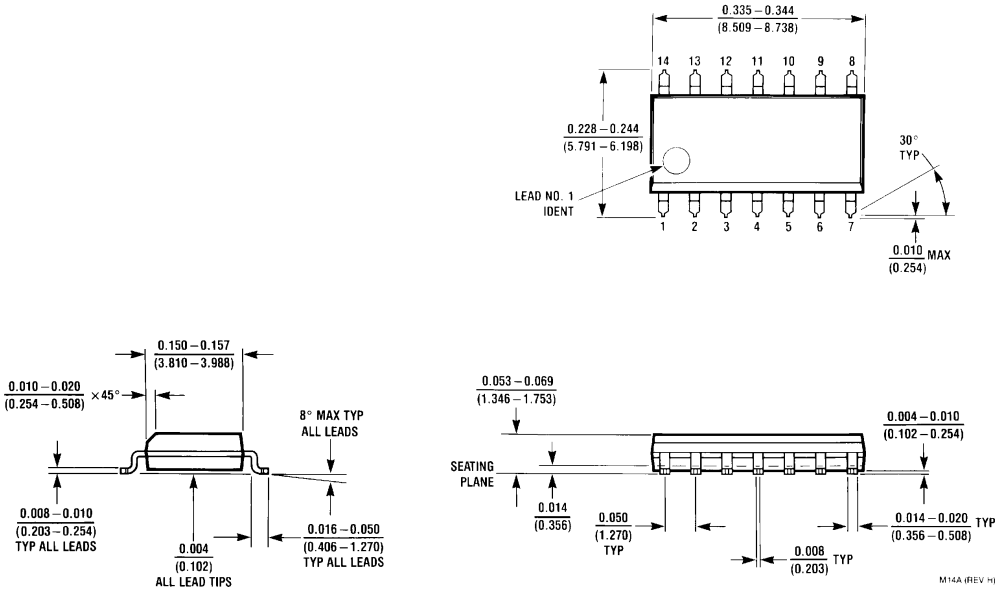

14-Lead Small Outline Integrated Circuit (SOIC), JEDEC MS-120, 0.150 Narrow
Package Number M14A

Physical Dimensions inches (millimeters) unless otherwise noted (Continued)

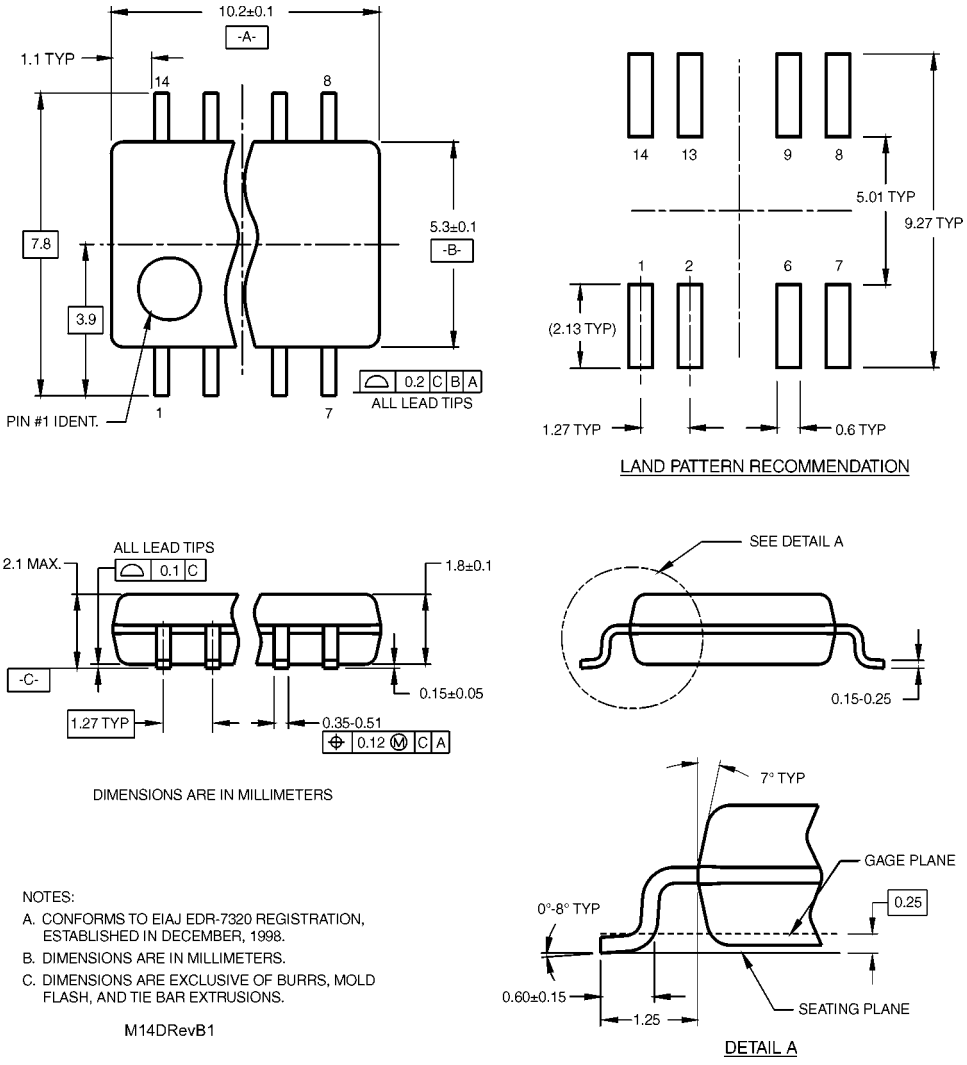

NOTES:

A. CONFORMS TO EIAJ EDR-7320 REGISTRATION, ESTABLISHED IN DECEMBER, 1998.

B. DIMENSIONS ARE IN MILLIMETERS.

C. DIMENSIONS ARE EXCLUSIVE OF BURRS, MOLD FLASH, AND TIE BAR EXTRUSIONS.

M14DRevB1

14-Lead Small Outline Package (SOP), EIAJ TYPE II, 5.3mm Wide
Package Number M14D

Physical Dimensions inches (millimeters) unless otherwise noted (Continued)

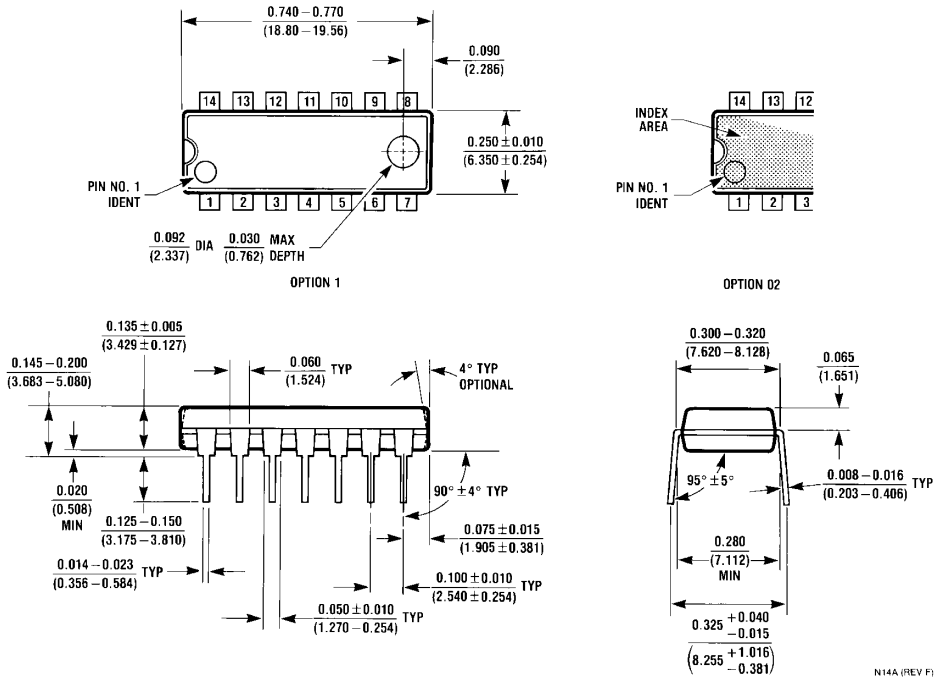

14-Lead Plastic Dual-In-Line Package (PDIP), JEDEC MS-001, 0.300 Wide
Package Number N14A

Fairchild does not assume any responsibility for use of any circuitry described, no circuit patent licenses are implied and Fairchild reserves the right at any time without notice to change said circuitry and specifications.

LIFE SUPPORT POLICY

FAIRCHILD'S PRODUCTS ARE NOT AUTHORIZED FOR USE AS CRITICAL COMPONENTS IN LIFE SUPPORT DEVICES OR SYSTEMS WITHOUT THE EXPRESS WRITTEN APPROVAL OF THE PRESIDENT OF FAIRCHILD SEMICONDUCTOR CORPORATION. As used herein:

1. Life support devices or systems are devices or systems which, (a) are intended for surgical implant into the body, or (b) support or sustain life, and (c) whose failure to perform when properly used in accordance with instructions for use provided in the labeling, can be reasonably expected to result in a significant injury to the user.
2. A critical component in any component of a life support device or system whose failure to perform can be reasonably expected to cause the failure of the life support device or system, or to affect its safety or effectiveness.

www.fairchildsemi.com