- **Package Options Include Plastic Small-Outline (D, NS, PS), Shrink Small-Outline (DB), and Ceramic Flat (W) Packages, Ceramic Chip Carriers (FK), and Standard Plastic (N) and Ceramic (J) DIPs**
- **Also Available as Dual 2-Input Positive-NAND Gate in Small-Outline (PS) Package**

SN5400 . . . J PACKAGE
SN54LS00, SN54S00 . . . J OR W PACKAGE
SN7400, SN74S00 . . . D, N, OR NS PACKAGE
SN74LS00 . . . D, DB, N, OR NS PACKAGE
(TOP VIEW)

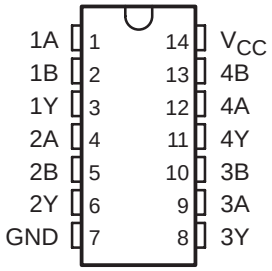

SN74LS00, SN74S00 . . . PS PACKAGE
(TOP VIEW)

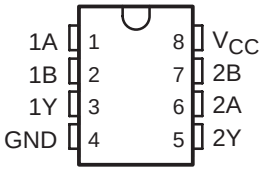

SN5400 . . . W PACKAGE
(TOP VIEW)

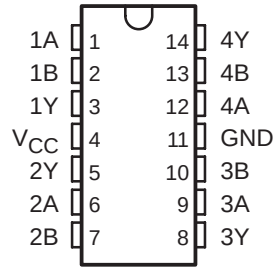

SN54LS00, SN54S00 . . . FK PACKAGE
(TOP VIEW)

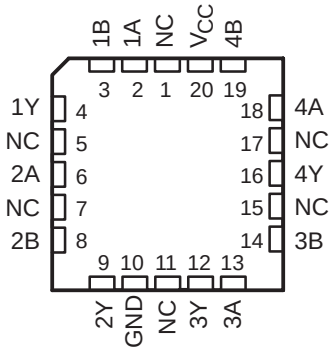

NC − No internal connection

description/ordering information

These devices contain four independent 2-input NAND gates. The devices perform the Boolean function $Y = \overline{A \bullet B}$ or $Y = \overline{A} + \overline{B}$ in positive logic.

Please be aware that an important notice concerning availability, standard warranty, and use in critical applications of Texas Instruments semiconductor products and disclaimers thereto appears at the end of this data sheet.

PRODUCTION DATA information is current as of publication date. Products conform to specifications per the terms of Texas Instruments standard warranty. Production processing does not necessarily include testing of all parameters.

Copyright © 2003, Texas Instruments Incorporated
On products compliant to MIL-PRF-38535, all parameters are tested unless otherwise noted. On all other products, production processing does not necessarily include testing of all parameters.

description/ordering information (continued)

ORDERING INFORMATION

T_A	PACKAGE†		ORDERABLE PART NUMBER	TOP-SIDE MARKING
0°C to 70°C	PDIP − N	Tube	SN7400N	SN7400N
			SN74LS00N	SN74LS00N
			SN74S00N	SN74S00N
	SOIC − D	Tube	SN7400D	7400
		Tape and reel	SN7400DR	
		Tube	SN74LS00D	LS00
		Tape and reel	SN74LS00DR	
		Tube	SN74S00D	S00
		Tape and reel	SN74S00DR	
	SOP − NS	Tape and reel	SN7400NSR	SN7400
			SN74LS00NSR	74LS00
			SN74S00NSR	74S00
	SOP − PS	Tape and reel	SN74LS00PSR	LS00
			SN74S00PSR	S00
	SSOP − DB	Tape and reel	SN74LS00DBR	LS00
−55°C to 125°C	CDIP − J	Tube	SNJ5400J	SNJ5400J
			SNJ54LS00J	SNJ54LS00J
			SNJ54S00J	SNJ54S00J
	CFP − W	Tube	SNJ5400W	SNJ5400W
			SNJ54LS00W	SNJ54LS00W
			SNJ54S00W	SNJ54S00W
	LCCC − FK	Tube	SNJ54LS00FK	SNJ54LS00FK
			SNJ54S00FK	SNJ54S00FK

† Package drawings, standard packing quantities, thermal data, symbolization, and PCB design guidelines are available at www.ti.com/sc/package.

FUNCTION TABLE
(each gate)

INPUTS		OUTPUT
A	B	Y
H	H	L
L	X	H
X	L	H

logic diagram, each gate (positive logic)



schematic

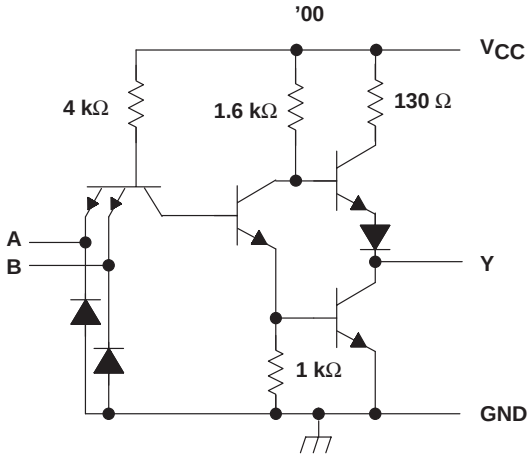

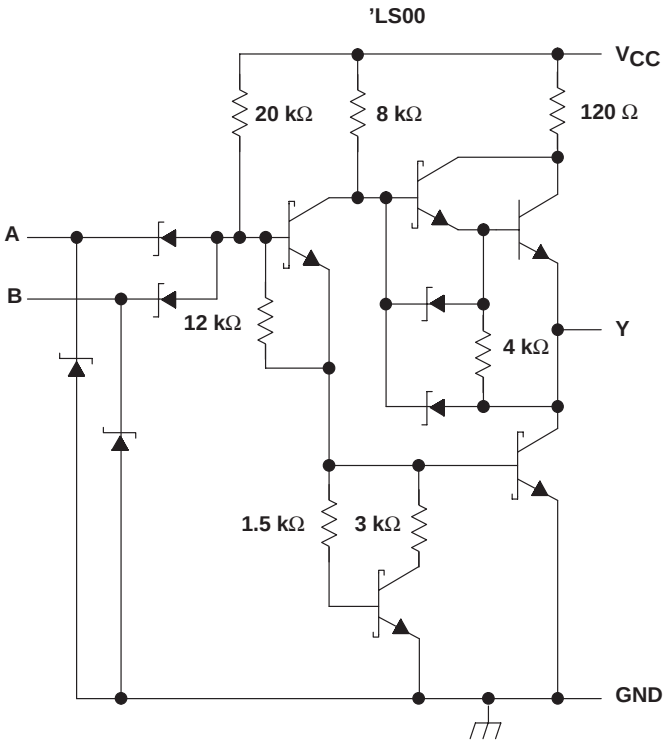

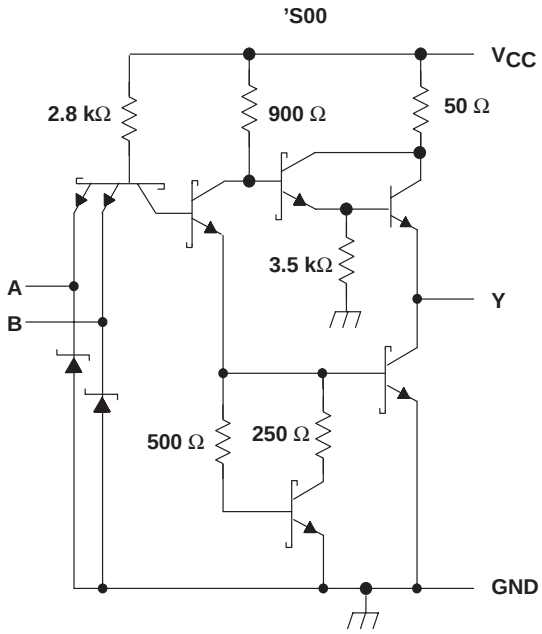

Resistor values shown are nominal.

absolute maximum ratings over operating free-air temperature (unless otherwise noted)†

Supply voltage, V_{CC} (see Note 1) . . . . . 7 V
Input voltage: ’00, ’S00 . . . . . 5.5 V
’LS00 . . . . . 7 V
Package thermal impedance, θ_{JA} (see Note 2): D package . . . . . 86°C/W
DB package . . . . . 96°C/W
N package . . . . . 80°C/W
NS package . . . . . 76°C/W
PS package . . . . . 95°C/W
Storage temperature range, T_{stg} . . . . . −65°C to 150°C

† Stresses beyond those listed under “absolute maximum ratings” may cause permanent damage to the device. These are stress ratings only, and functional operation of the device at these or any other conditions beyond those indicated under “recommended operating conditions” is not implied. Exposure to absolute-maximum-rated conditions for extended periods may affect device reliability.

NOTES: 1. Voltage values are with respect to network ground terminal.
2. The package termal impedance is calculated in accordance with JESD 51-7.

recommended operating conditions (see Note 3)

		SN5400			SN7400			UNIT
		MIN	NOM	MAX	MIN	NOM	MAX	
V_{CC}	Supply voltage	4.5	5	5.5	4.75	5	5.25	V
V_{IH}	High-level input voltage	2			2			V
V_{IL}	Low-level input voltage			0.8			0.8	V
I_{OH}	High-level output current			−0.4			−0.4	mA
I_{OL}	Low-level output current			16			16	mA
T_A	Operating free-air temperature	−55		125	0		70	°C

NOTE 3: All unused inputs of the device must be held at V_{CC} or GND to ensure proper device operation. Refer to the TI application report, *Implications of Slow or Floating CMOS Inputs*, literature number SCBA004.

electrical characteristics over recommended operating free-air temperature range (unless otherwise noted)

PARAMETER	TEST CONDITIONS‡			SN5400			SN7400			UNIT
				MIN	TYP§	MAX	MIN	TYP§	MAX	
V_{IK}	V_{CC} = MIN,	I_I = −12 mA				−1.5			−1.5	V
V_{OH}	V_{CC} = MIN,	V_{IL} = 0.8 V,	I_{OH} = −0.4 mA	2.4	3.4		2.4	3.4		V
V_{OL}	V_{CC} = MIN,	V_{IH} = 2 V,	I_{OL} = 16 mA		0.2	0.4		0.2	0.4	V
I_I	V_{CC} = MAX,	V_I = 5.5 V				1			1	mA
I_{IH}	V_{CC} = MAX,	V_I = 2.4 V				40			40	μA
I_{IL}	V_{CC} = MAX,	V_I = 0.4 V				−1.6			−1.6	mA
I_{OS}¶	V_{CC} = MAX			−20		−55	−18		−55	mA
I_{CCH}	V_{CC} = MAX,	V_I = 0 V			4	8		4	8	mA
I_{CCL}	V_{CC} = MAX,	V_I = 4.5 V			12	22		12	22	mA

‡ For conditions shown as MIN or MAX, use the appropriate value specified under recommended operating conditions.
§ All typical values are at V_{CC} = 5 V, T_A = 25°C.
¶ Not more than one output should be shorted at a time.

switching characteristics, V_{CC} = 5 V, T_A = 25°C (see Figure 1)

PARAMETER	FROM (INPUT)	TO (OUTPUT)	TEST CONDITIONS	SN5400 SN7400			UNIT
				MIN	TYP	MAX	
t_{PLH}	A or B	Y	R_L = 400 Ω, C_L = 15 pF		11	22	ns
t_{PHL}					7	15	

recommended operating conditions (see Note 4)

		SN54LS00			SN74LS00			UNIT
		MIN	NOM	MAX	MIN	NOM	MAX	
V_{CC}	Supply voltage	4.5	5	5.5	4.75	5	5.25	V
V_{IH}	High-level input voltage	2			2			V
V_{IL}	Low-level input voltage			0.7			0.8	V
I_{OH}	High-level output current			−0.4			−0.4	mA
I_{OL}	Low-level output current			4			8	mA
T_A	Operating free-air temperature	−55		125	0		70	°C

NOTE 4: All unused inputs of the device must be held at V_{CC} or GND to ensure proper device operation. Refer to the TI application report, *Implications of Slow or Floating CMOS Inputs*, literature number SCBA004.

electrical characteristics over recommended operating free-air temperature range (unless otherwise noted)

PARAMETER	TEST CONDITIONS†			SN54LS00			SN74LS00			UNIT
				MIN	TYP‡	MAX	MIN	TYP‡	MAX	
V_{IK}	V_{CC} = MIN,	I_I = −18 mA				−1.5			−1.5	V
V_{OH}	V_{CC} = MIN,	V_{IL} = MAX,	I_{OH} = −0.4 mA	2.5	3.4		2.7	3.4		V
V_{OL}	V_{CC} = MIN,	V_{IH} = 2 V	I_{OL} = 4 mA		0.25	0.4		0.25	0.4	V
			I_{OL} = 8mA					0.35	0.5	
I_I	V_{CC} = MAX,	V_I = 7 V				0.1			0.1	mA
I_{IH}	V_{CC} = MAX,	V_I = 2.7V				20			20	μA
I_{IL}	V_{CC} = MAX,	V_I = 0.4 V				−0.4			−0.4	mA
I_{OS}§	V_{CC} = MAX			−20		−100	−20		−100	mA
I_{CCH}	V_{CC} = MAX,	V_I = 0 V			0.8	1.6		0.8	1.6	mA
I_{CCL}	V_{CC} = MAX,	V_I = 4.5 V			2.4	4.4		2.4	4.4	mA

† For conditions shown as MIN or MAX, use the appropriate value specified under recommended operating conditions.
‡ All typical values are at V_{CC} = 5 V, T_A = 25°C.
§ Not more than one output should be shorted at a time.

switching characteristics, V_{CC} = 5 V, T_A = 25°C (see Figure 1)

PARAMETER	FROM (INPUT)	TO (OUTPUT)	TEST CONDITIONS	SN54LS00 SN74LS00			UNIT
				MIN	TYP	MAX	
t_{PLH}	A or B	Y	R_L = 2 kΩ, C_L = 15 pF		9	15	ns
t_{PHL}					10	15	

recommended operating conditions (see Note 5)

		SN54S00			SN74S00			UNIT
		MIN	NOM	MAX	MIN	NOM	MAX	
V_{CC}	Supply voltage	4.5	5	5.5	4.75	5	5.25	V
V_{IH}	High-level input voltage	2			2			V
V_{IL}	Low-level input voltage			0.8			0.8	V
I_{OH}	High-level output current			−1			−1	mA
I_{OL}	Low-level output current			20			20	mA
T_A	Operating free-air temperature	−55		125	0		70	°C

NOTE 5: All unused inputs of the device must be held at V_{CC} or GND to ensure proper device operation. Refer to the TI application report, *Implications of Slow or Floating CMOS Inputs*, literature number SCBA004.

electrical characteristics over recommended operating free-air temperature range (unless otherwise noted)

PARAMETER	TEST CONDITIONS†			SN54S00			SN74S00			UNIT
				MIN	TYP‡	MAX	MIN	TYP‡	MAX	
V_{IK}	V_{CC} = MIN,	I_I = −18 mA				−1.2			−1.2	V
V_{OH}	V_{CC} = MIN,	V_{IL} = 0.8 V,	I_{OH} = −1 mA	2.5	3.4		2.7	3.4		V
V_{OL}	V_{CC} = MIN,	V_{IH} = 2 V,	I_{OL} = 20 mA			0.5			0.5	V
I_I	V_{CC} = MAX,	V_I = 5.5 V				1			1	mA
I_{IH}	V_{CC} = MAX,	V_I = 2.7 V				50			50	µA
I_{IL}	V_{CC} = MAX,	V_I = 0.5V				−2			−2	mA
I_{OS}§	V_{CC} = MAX			−40		−100	−40		−100	mA
I_{CCH}	V_{CC} = MAX,	V_I = 0 V			10	16		10	16	mA
I_{CCL}	V_{CC} = MAX,	V_I = 4.5 V			20	36		20	36	mA

† For conditions shown as MIN or MAX, use the appropriate value specified under recommended operating conditions.
‡ All typical values are at V_{CC} = 5 V, T_A = 25°C.
§ Not more than one output should be shorted at a time.

switching characteristics, V_{CC} = 5 V, T_A = 25°C (see Figure 1)

PARAMETER	FROM (INPUT)	TO (OUTPUT)	TEST CONDITIONS		SN54S00 SN74S00			UNIT
					MIN	TYP	MAX	
t_{PLH}	A or B	Y	R_L = 280 Ω,	C_L = 15 pF		3	4.5	ns
t_{PHL}						3	5	
t_{PLH}	A or B	Y	R_L = 280 Ω,	C_L = 50 pF		4.5		ns
t_{PHL}						5		

PARAMETER MEASUREMENT INFORMATION
SERIES 54/74 DEVICES

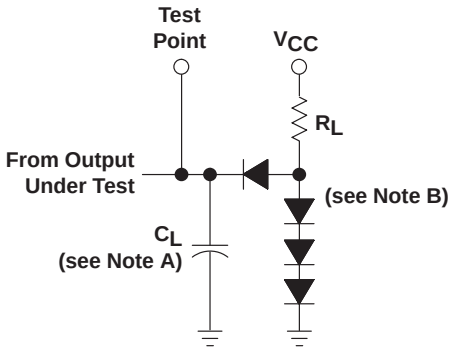

LOAD CIRCUIT FOR 2-STATE TOTEM-POLE OUTPUTS

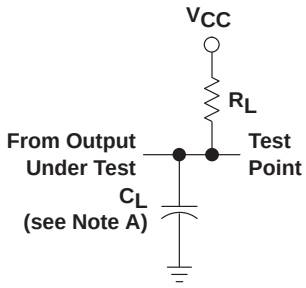

LOAD CIRCUIT FOR OPEN-COLLECTOR OUTPUTS

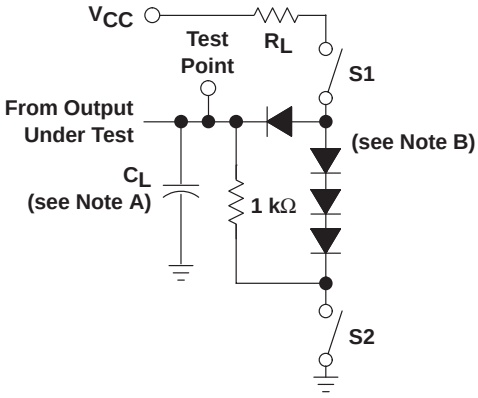

LOAD CIRCUIT FOR 3-STATE OUTPUTS

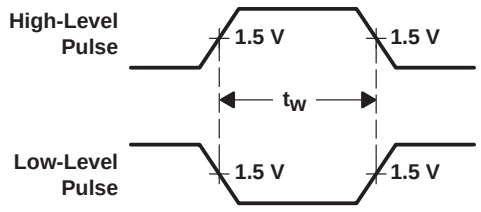

VOLTAGE WAVEFORMS PULSE DURATIONS

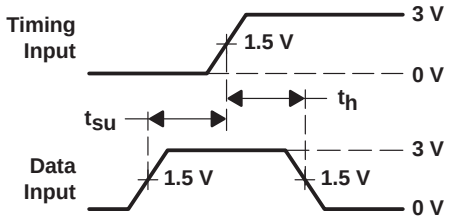

VOLTAGE WAVEFORMS SETUP AND HOLD TIMES

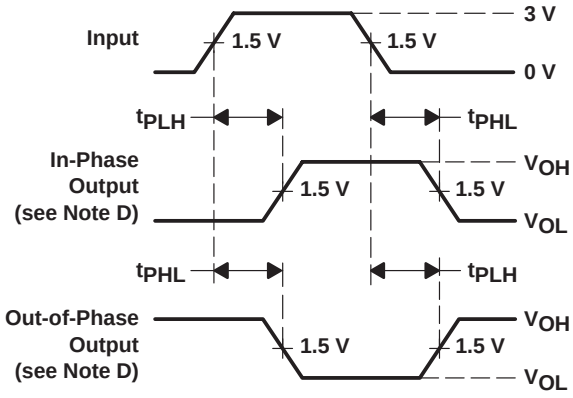

VOLTAGE WAVEFORMS PROPAGATION DELAY TIMES

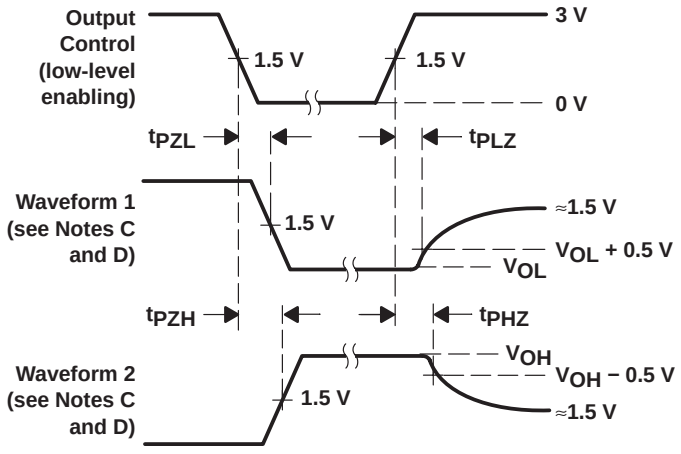

VOLTAGE WAVEFORMS ENABLE AND DISABLE TIMES, 3-STATE OUTPUTS

NOTES: A. C_L includes probe and jig capacitance.
B. All diodes are 1N3064 or equivalent.
C. Waveform 1 is for an output with internal conditions such that the output is low except when disabled by the output control. Waveform 2 is for an output with internal conditions such that the output is high except when disabled by the output control.
D. S1 and S2 are closed for t_{PLH}, t_{PHL}, t_{PHZ}, and t_{PLZ}; S1 is open and S2 is closed for t_{PZH}; S1 is closed and S2 is open for t_{PZL}.
E. All input pulses are supplied by generators having the following characteristics: PRR ≤ 1 MHz, $Z_O \approx 50\ \Omega$; t_r and $t_f \le 7$ ns for Series 54/74 devices and t_r and $t_f \le 2.5$ ns for Series 54S/74S devices.
F. The outputs are measured one at a time with one input transition per measurement.

Figure 1. Load Circuits and Voltage Waveforms