- **Package Options Include Plastic and Ceramic DIPs and Ceramic Flat Packages**
- **Dependable Texas Instruments Quality and Reliability**

description

These devices contain four independent 2-input-NOR line drivers. They perform the Boolean function $Y = \overline{A + B}$ or $Y = \overline{A} \cdot \overline{B}$. The SN54128 is designed to drive 75 ohm lines. The SN74128 is designed to drive 50 ohm lines.

The SN54128 is characterized for operation over the full military temperature range of −55°C to 125°C. The SN74128 is characterized for operation from 0°C to 70°C.

SN54128 . . . J OR W PACKAGE
SN74128 . . . N PACKAGE
(TOP VIEW)

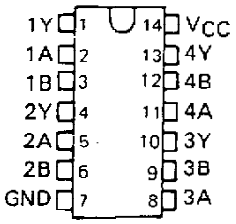

logic diagram (each driver)



logic symbol†

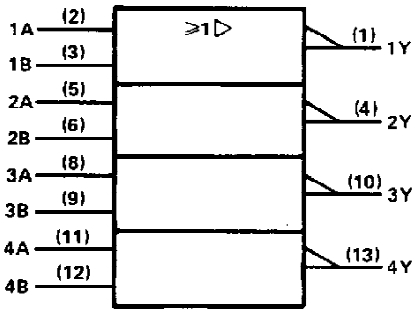

†This symbol is in accordance with ANSI/IEEE Std 91-1984 and IEC Publication 617-12.

schematic (each driver)

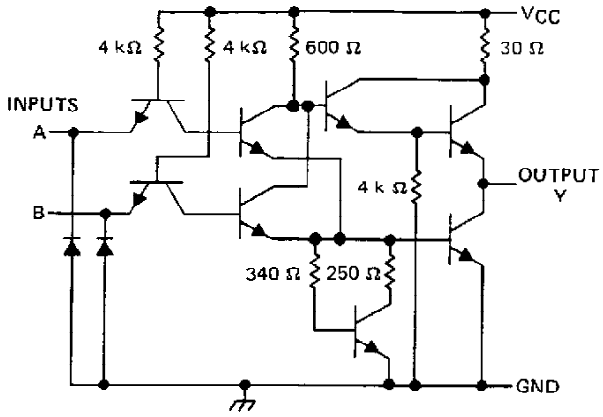

Resistor values shown are nominal.

absolute maximum ratings over operating free-air temperature range (unless otherwise noted)

Supply voltage, V_{CC} (see Note 1) . . . . . 7 V
Input voltage . . . . . 5.5 V
Operating free-air temperature range: SN54' . . . . . −55°C to 125°C
SN74' . . . . . 0°C to 70°C
Storage temperature range . . . . . −65°C to 150°C

NOTE 1: Voltage values are with respect to network ground terminal.

PRODUCTION DATA documents contain information current as of publication date. Products conform to specifications per the terms of Texas Instruments standard warranty. Production processing does not necessarily include testing of all parameters.

recommended operating conditions

		SN54128			SN74128			UNIT
		MIN	NOM	MAX	MIN	NOM	MAX	
V_{CC}	Supply voltage	4.5	5	5.5	4.75	5	5.25	V
V_{IH}	High-level input voltage	2			2			V
V_{IL}	Low-level input voltage			0.8			0.8	V
I_{OH}	High-level output current			−29			−42.4	mA
I_{OL}	Low-level output current			48			48	mA
T_A	Operating free-air temperature	−55		125	0		70	°C

electrical characteristics over recommended operating free-air temperature range (unless otherwise noted)

PARAMETER	TEST CONDITIONS †			MIN	TYP‡	MAX	UNIT
V_{IK}	V_{CC} = MIN,	I_I = −12 mA				−1.5	V
V_{OH}	V_{CC} = MIN,	V_{IL} = 0.8 V,	I_{OH} = −2.4 mA	2.4	3.4		V
	V_{CC} = MIN,	V_{IL} = 0.4 V,	I_{OH} = −13.2 mA	2.4			
	V_{CC} = MIN,	V_{IL} = 0.4 V,	I_{OH} = MAX	2			
V_{OL}	V_{CC} = MIN,	V_{IH} = 2 V,	I_{OL} = 48 mA		0.26	0.4	V
I_I	V_{CC} = MAX,	V_I = 5.5 V				1	mA
I_{IH}	V_{CC} = MAX,	V_I = 2.4 V				40	μA
I_{IL}	V_{CC} = MAX,	V_I = 0.4 V				−1.6	mA
I_{OS}§	V_{CC} = MAX			−70		−180	mA
I_{CCH}	V_{CC} = MAX				12	21	mA
I_{CCL}	V_{CC} = MAX				33	57	mA

† For conditions shown as MIN or MAX, use the appropriate value specified under recommended operating conditions.
‡ All typical values are at V_{CC} = 5 V, T_A = 25°C.
§ Not more than one output should be shorted at a time.

switching characteristics, V_{CC} = 5 V, T_A = 25°C (see note 2)

PARAMETER	FROM (INPUT)	TO (OUTPUT)	TEST CONDITIONS		MIN	TYP	MAX	UNIT
t_{PLH}	A or B	Y	R_L = 133 Ω,	C_L = 50 pF		6	9	ns
t_{PHL}						8	12	ns
t_{PLH}			R_L = 133 Ω,	C_L = 150 pF		10	15	ns
t_{PHL}						12	18	ns

NOTE 2: Load circuits and voltage waveforms are shown in Section 1.