BUY69A

HIGH VOLTAGE NPN SILICON TRANSISTOR

- STM PREFERRED SALESTYPE
- NPN TRANSISTOR
- HIGH VOLTAGE CAPABILITY
- HIGH CURRENT CAPABILITY
- FAST SWITCHING SPEED
- HIGH POWER TO-3 PACKAGE

APPLICATIONS:

- HORIZONTAL DEFLECTION FOR COLOUR TV
- SWITCHING REGULATORS

DESCRIPTION

The BUY69A is a silicon multiepitaxial mesa NPN transistor in Jedec TO-3 metal case. It is intended for horizontal deflection output stage of CTV receivers and high voltage, fast switching and industrial applications.

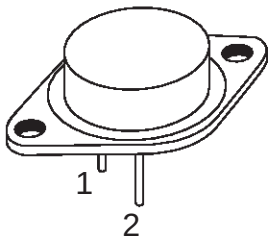

TO-3

INTERNAL SCHEMATIC DIAGRAM

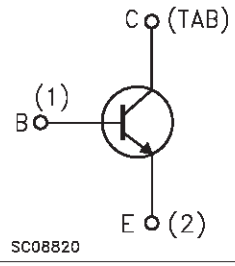

ABSOLUTE MAXIMUM RATINGS

Symbol	Parameter	Value	Unit
V_{CES}	Collector-Emitter Voltage (V_{BE} = 0)	1000	V
V_{CEO}	Collector-Emitter Voltage (I_B = 0)	400	V
V_{EBO}	Emitter-Base Voltage (I_C = 0)	8	V
I_C	Collector Current	10	A
I_{CM}	Collector Peak Current (tp ≤ 10 ms)	15	A
I_B	Base Current	3	A
P_{tot}	Total Dissipation at $T_c \leq 25\ ^oC$	100	W
T_{stg}	Storage Temperature	-65 to 200	^oC
T_j	Max. Operating Junction Temperature	200	^oC

THERMAL DATA

$R_{thj\text{-}case}$	Thermal Resistance Junction-case	Max	1.75	$^oC/W$

ELECTRICAL CHARACTERISTICS (T_{case} = 25 ^oC unless otherwise specified)

Symbol	Parameter	Test Conditions	Min.	Typ.	Max.	Unit
I_{CES}	Collector Cut-off Current (V_{BE} = 0)	V_{CE} = 1000 V			1	mA
I_{EBO}	Emitter Cut-off Current (I_C = 0)	V_{EB} = 8 V			1	mA
$V_{CEO(sus)}$	Collector-Emitter Sustaining Voltage	I_C = 100 mA	1000			V
$V_{CE(sat)}$*	Collector-Emitter Saturation Voltage	I_C = 8 A I_B = 2.5 A			3.3	V
$V_{BE(sat)}$*	Base-Emitter Saturation Voltage	I_C = 8 A I_B = 2.5 A			2.2	V
h_{FE}*	DC Current Gain	I_C = 2.5 A V_{CE} = 10 V	15			
f_T	Transition Frequency	I_C = 0.5 A V_{CE} = 10 V		10		MHz
$I_{s/b}$**	Second Breakdown Collector Current	V_{CE} = 25 V	4			A
t_{on}	Turn on Time	IC = 5 A V_{CE} = 250 V I_{B1} = 1 A		0.2		µs
t_s t_s	Storage Time Fall Time	I_C = 5 A V_{CE} = 250 V I_{B1} = - I_{B2} = 1 A			1.7 0.3	µs µs
t_f	Fall Time	I_C = 8 A V_{CE} = 40 V I_{B1} = - I_{B2} = 2.5 A			1	µs

* Pulsed: Pulse duration = 300 µs, duty cycle 1.5 %
** Pulsed: 1s, non repetitive pulse.

For characteristics curves see the BUW34/5/6 series.

TO-3 MECHANICAL DATA

DIM.	mm			inch		
	MIN.	TYP.	MAX.	MIN.	TYP.	MAX.
A	11.00		13.10	0.433		0.516
B	0.97		1.15	0.038		0.045
C	1.50		1.65	0.059		0.065
D	8.32		8.92	0.327		0.351
E	19.00		20.00	0.748		0.787
G	10.70		11.10	0.421		0.437
N	16.50		17.20	0.649		0.677
P	25.00		26.00	0.984		1.023
R	4.00		4.09	0.157		0.161
U	38.50		39.30	1.515		1.547
V	30.00		30.30	1.187		1.193

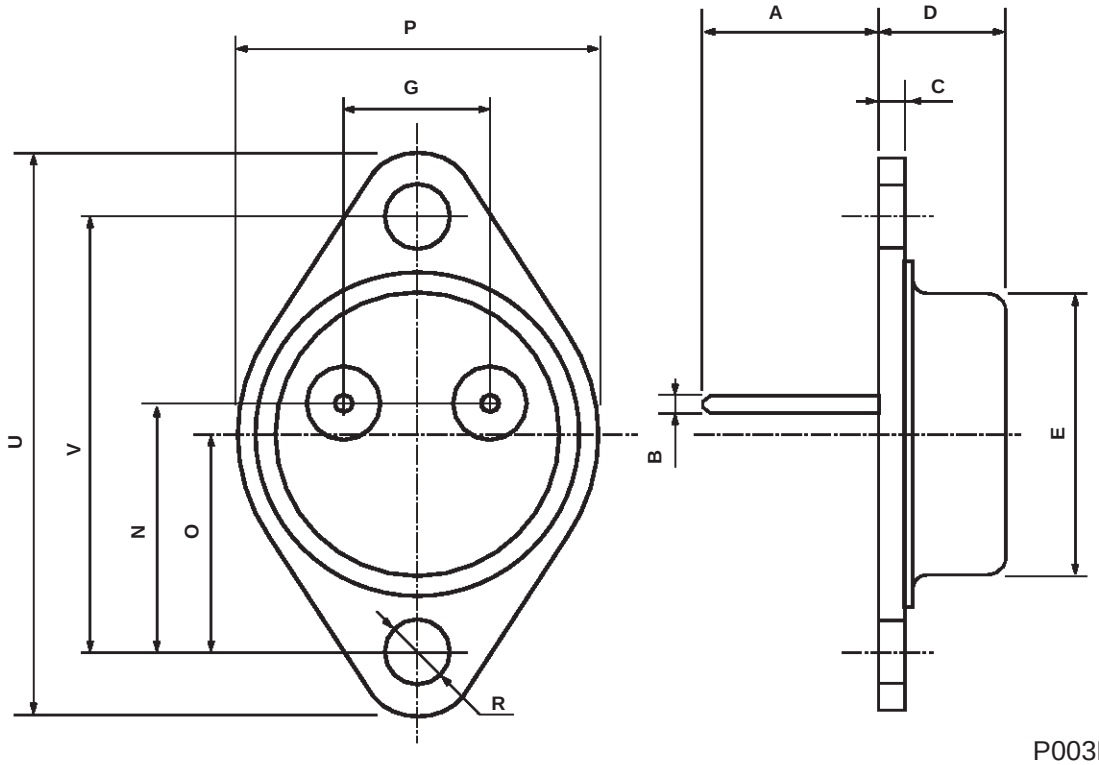

P003F

Information furnished is believed to be accurate and reliable. However, STMicroelectronics assumes no responsibility for the consequences of use of such information nor for any infringement of patents or other rights of third parties which may result from its use. No license is granted by implication or otherwise under any patent or patent rights of STMicroelectronics. Specification mentioned in this publication are subject to change without notice. This publication supersedes and replaces all information previously supplied. STMicroelectronics products are not authorized for use as critical components in life support devices or systems without express written approval of STMicroelectronics.

The ST logo is a trademark of STMicroelectronics

© 1998 STMicroelectronics – Printed in Italy – All Rights Reserved

STMicroelectronics GROUP OF COMPANIES

Australia - Brazil - Canada - China - France - Germany - Italy - Japan - Korea - Malaysia - Malta - Mexico - Morocco - The Netherlands - Singapore - Spain - Sweden - Switzerland - Taiwan - Thailand - United Kingdom - U.S.A.

.