BURR-BROWN®

DAC82

8-BIT DIGITAL-TO-ANALOG CONVERTER

FEATURES

- 8-BIT RESOLUTION/LINEARITY
- NO EXTERNAL ADJUSTMENTS REQUIRED FOR ±1LSB ACCURACY
- INTERNAL REFERENCE AND SCALING RESISTORS
- 2-QUADRANT MULTIPLYING WITH EXTERNAL REFERENCE
- HERMETIC, DUAL-IN-LINE PACKAGE
- OPERATION OVER −55°C TO +125°C

DESCRIPTION

The DAC82 is an 8-bit digital-to-analog converter with voltage and current outputs. Packaged in an 18-pin metal DIP, it is complete with its own internal reference and scaling resistors. When used with a variable, external reference, the DAC82 will multiply in two quadrants. Two versions are available: the DAC82BM (-25°C to +85°C) and the DAC82SM (-55°C to +125°C). Both offer ±1LSB absolute accuracy at room temperature with no external adjustments required and nonlineaity is guaranteed to be within ±1/2LSB over the specified temperature ranges. The small size of the DAC82 makes it an ideal choice for applications where space or weight is at a premium such as aircraft instrumentation, portable instruments, or CRT displays.

FUNCTIONAL DIAGRAM

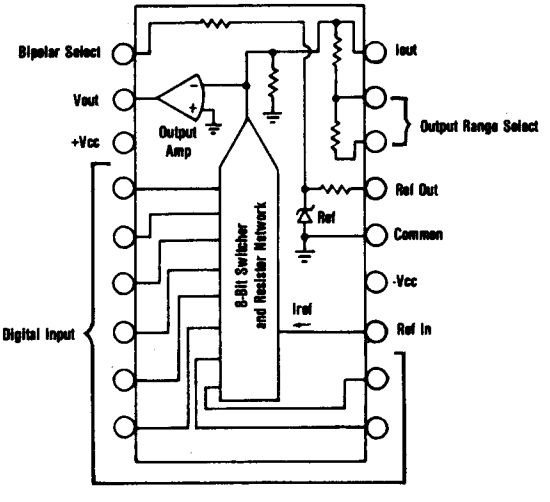

International Airport Industrial Park - P.O. Box 11400 - Tucson, Arizona 85734 - Tel. (602) 746-1111 - Twx: 910-952-1111 - Cable: BBRCORP - Telex: 66-6491

ELECTRICAL SPECIFICATIONS

MODEL	DAC82KG DAC82BM	DAC82SM	UNITS
DIGITAL INPUT			
Resolution	8	8	Bits
Logic Levels (TTL compatible)			
Logic "1"	$+2 < e_a < +5.5$ at $+40\mu A$		V
Logic "0"	$0 < e_a < +0.8$ at -1.0mA		V
TRANSFER CHARACTERISTICS			
ACCURACY			
Linearity Error at 25°C (max)	±0.16	±0.16	% of FSR
-25°C to +85°C (max)	±0.2		% of FSR
-55°C to +125°C (max)		±0.2	% of FSR
Differential Linearity Error	±0.5	±0.5	LSB
Gain Error	±0.1	±0.1	%
Offset Error	±0.05	±0.05	% of FSR
Total Accuracy Error (max)	±1	±1	LSB
Monotonicity Temp Range	-25 to +85	-55 to +125	°C
DRIFT			
Gain (max)			
-25°C to +85°C	±50		ppm °C
-55°C to +125°C		±35	ppm °C
Offset			
Unipolar			
-25°C to +85°C	±1		ppm of FSR/°C
-55°C to +125°C		±1	ppm of FSR °C
Bipolar (max)			
-25°C to +85°C	±20		ppm of FSR °C
-55°C to +125°C		±15	ppm of FSR/°C
CONVERSION SPEED			
Voltage Output			
Settling time to ±0.2% of FSR			
For FSR change			
20V Range	2.5		µsec
10V Range	2.0		µsec
For 1 LSB change	0.5		µsec
Slew Rate	20		V/µsec
Current Output			
Settling time to ±0.2%			
For FSR change			
10 to 100Ω load	250		nsec
1kΩ load	350		nsec
OUTPUT			
ANALOG OUTPUT			
Voltage Output			
Ranges	±2.5, ±5, ±10, +5, +10		Volts
Output Current, min	±5		mA
Output Impedance (DC)	0.05		Ω
Current Output			
Ranges	±0.8, 0 to -1.6		mA
Output Impedance - Bipolar	1.8		kΩ
Unipolar	2.0		kΩ
Compliance	±4.0V		Volts
INTERNAL REFERENCE VOLTAGE			
Magnitude	+6.3		Volts
Tempco of Drift, max	±20		ppm/°C
POWER SUPPLY SENSITIVITY			
+15VDC Supply	±0.02		% of FSR/%Vs
-15VDC Supply	±0.002		% of FSR/%Vs
POWER SUPPLY REQUIREMENTS			
Rated Voltage	±15		Volts
Range	±14.0 to ±16.0		Volts
Supply Drain (No load)			
+15VDC	15		mA
-15VDC	10		mA
TEMPERATURE RANGE			
Specification	-25 to +85	-55 to +125	°C
Operating (double above drift specs)	-55 to +125	-55 to +125	°C
Storage	-55 to +125	-55 to +125	°C

MECHANICAL

NOTE
Leads in true position within .010" (.25mm) R @ MMC at seating plane.

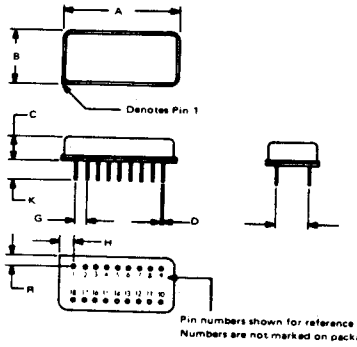

CONNECTOR: None
CASE: Metal (BM, SM) Ceramic (KG)
PIN: Pin material and plating composition conform to method 2003 (solderability) of MIL-STD-883 (except paragraph 3.2)
HERMETICITY: Gross Leak (fluorocarbon) Fine Leak (helium, 5 x 10^{-7}cc/sec) (BM, SM only)

DIM	INCHES		MILLIMETERS	
	MIN	MAX	MIN	MAX
A	1.060	1.080	26.92	27.43
B	.490	.510	12.45	12.95
C	.170	.260	4.32	6.35
D	.016	.021	0.41	0.52
G	.100 BASIC		2.54 BASIC	
H	.115	.155	2.92	3.94
K	.150	.300	3.81	7.62
L	.300 BASIC		7.62 BASIC	
R	.080	.120	2.03	3.05

CONNECTION DIAGRAM

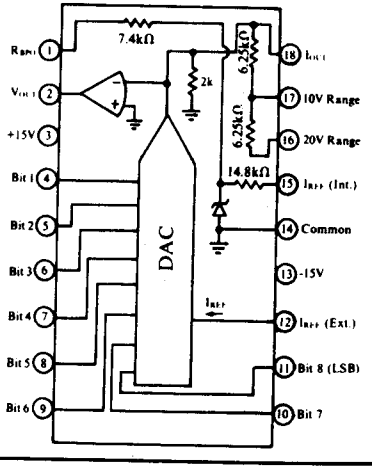

DISCUSSION OF SPECIFICATIONS

DIGITAL INPUT CODES

The DAC82 accepts digital inputs in complementary binary (CBI) format and may be connected for complementary straight binary (CSB) or complementary offset binary (COB) operation. By using one external inverter, the user can operate the DAC82 in the complementary two's complement (CTC) mode.

DIGITAL INPUT CODES	OUTPUT RANGE			
	VOLTAGE*		CURRENT	
	0 to +10V	±10V	0 to 1.6mA	±0.8mA
MSB LSB				
0 0 0 0 0 0 0 0	+9.961V	+9.922V	-1.594mA	-0.794mA
0 1 1 1 1 1 1 1	+5.000V	0.000V	-0.800mA	0.000mA
1 0 0 0 0 0 0 0	+4.961V	-78.12mV	-0.792mA	+6.248μA
1 1 1 1 1 1 1 1	0.000V	-10.000V	0.000mA	+0.800mA
one LSB	39.06mV	78.12mV	6.248μA	6.248μA

* To obtain values for other binary (CBI) ranges:
0 to +5V range: divide 0 to +10V range values by 2.
±5V range: divide ±10V range values by 2.
±2.5V range: divide ±10V range values by 4.

TABLE I. Digital Input and Analog Output Relationship.

ACCURACY

LINEARITY

The LINEARITY of a D/A converter is the true measure of its performance. The DAC82 analog output will not vary by more than ±1/2 LSB from an ideal straight line drawn between the end points (all 1's and all 0's) over the specified temperature range.

DIFFERENTIAL LINEARITY

The DIFFERENTIAL LINEARITY error of a D/A converter is the deviation from an ideal 1 LSB voltage change from one adjacent output state to the next. A DIFFERENTIAL LINEARITY error specification of ±1/2 LSB means that the output voltage can change anywhere from 1/2 LSB to 3/2 LSB when the input changes from one adjacent digital state to the next.

DRIFT

GAIN DRIFT

GAIN DRIFT is a measure of the change in the analog output over temperature expressed in parts per million per °C (ppm/°C). The GAIN DRIFT is determined by testing the end point differences at the high and low temperature extremes and at 25°C for each model, calculating the GAIN ERROR with respect to the 25°C value, and dividing by the temperature change.

OFFSET DRIFT

OFFSET DRIFT is a measure of the actual change in output voltage at zero volts output over the specified temperature range. The offset voltage is measured at the temperature extremes, and the maximum change referenced to 25°C is divided by the temperature range. This drift is expressed in parts per million of full scale range per °C (ppm of FSR/°C).

SETTLING TIME

Settling time is the time required for the output to enter and remain in an error band equal to ±0.2% of full scale range measured from the time the digital input is changed. Typical settling time values for full scale changes are a function of the load resistor and are shown in the figure below.

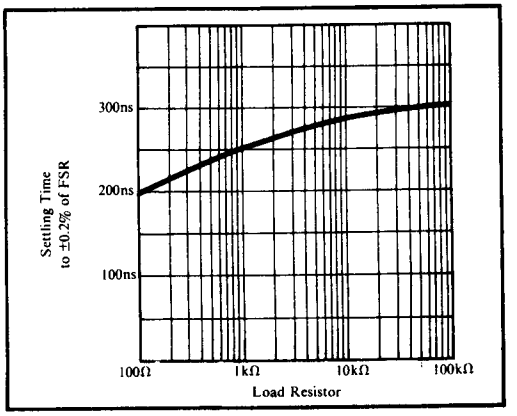

FIGURE 1. Settling Time for FSR Change vs Load.

COMPLIANCE

The COMPLIANCE VOLTAGE of the DAC82 is the maximum voltage swing allowed on the current output in order to maintain the specified accuracy. It is -4.0 to +4.0 volts for the unipolar and bipolar current ranges.

POWER SUPPLY SENSITIVITY

POWER SUPPLY SENSITIVITY is a measure of the effect of a power supply voltage change on the D/A converter output. It is defined as a percent of FSR/percent of change in either the +15 volt or -15 volt power supplies about the nominal power supply voltages. Figure 2 shows Power Supply Rejection vs Frequency.

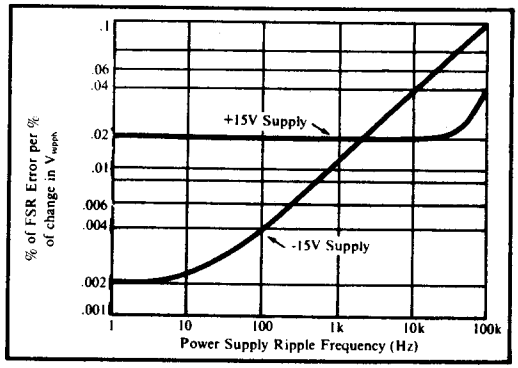

FIGURE 2. Power Supply Rejection vs. Power Supply Ripple Frequency.

OPERATING INSTRUCTIONS

POWER SUPPLY CONNECTIONS

DECOUPLING

For best performance and noise rejection, power supply decoupling capacitors should be connected as shown in Figure 3. These capacitors should be located close to the DAC82 and should be tantalum or electrolytic types bypassed with a 0.01 μF ceramic capacitor for best high frequency performance.

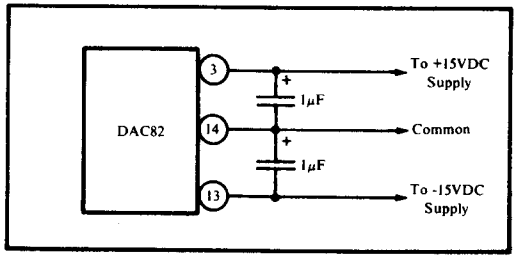

FIGURE 3. Recommended Power Supply Decoupling.

OPERATION IN THE CURRENT OUTPUT MODE

On the current output pin, the DAC82 provides a unipolar output current of 0 to -1.6mA and a bipolar output current of ±0.8mA. Refer to Figure 4 and Table II for proper connections. In applications requiring the use of the DAC82 in the current output mode, such as an A/D converter, the internal scaling resistors should be used to generate currents corresponding to analog input voltages.

OUTPUT RANGE	CONNECT PIN 1 TO:
0 to -1.6mA	N.C.
±0.8mA	Pin 18

TABLE II. Connections for Current Output Mode.

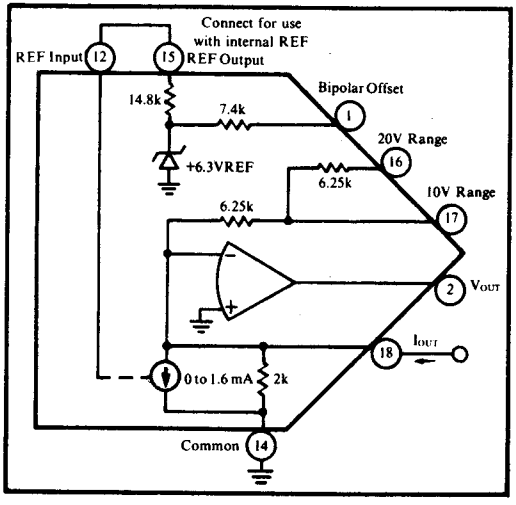

FIGURE 4. Current Output Mode Connection Diagram.

DRIVING AN EXTERNAL OP AMP

UNIPOLAR OR BIPOLAR - UP TO 20V OUTPUT RANGE

The DAC82 will drive the summing junction of an op amp (the op amp being used as a current to voltage converter) to produce an output voltage (see Figure 5).

$$V_{OUT} = -I_{OUT} \times R_F$$

where I_{OUT} is the DAC82 output current and R_F is the feedback resistor. The internal feedback resistors should be used to maintain the temperature drift specification. Refer to Table III and Figure 5 for proper connections.

OUTPUT RANGE	DIGITAL INPUT CODES	CONNECT Ⓐ TO	CONNECT PIN 1 TO	CONNECT PIN 16 TO
±10V	COB or CTC	16	18	Ⓐ
±5V	COB or CTC	17	18	N.C.
±2.5V	COB or CTC	17	18	18
0 to +10V	CSB	17	Common	N.C.
0 to +5V	CSB	17	Common	18

TABLE III. Voltage Ranges of Current Output DAC82 with External Op Amp.

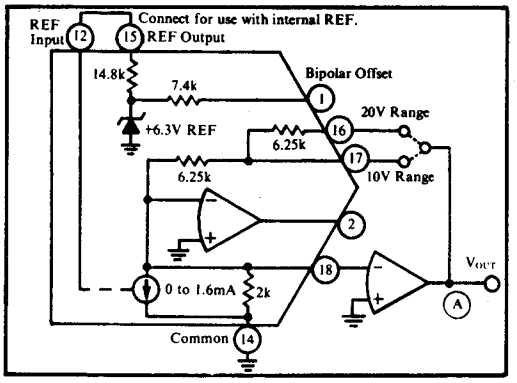

FIGURE 5. External Op Amp - Using Internal Feedback Resistors.

OUTPUTS LARGER THAN 20 VOLT RANGE

For output voltage ranges larger than ±10 volts, a high voltage op amp may be employed with an external feedback resistor. Use I_{OUT} values of ±0.8mA for bipolar voltage ranges, and 0 to -1.6mA for unipolar voltage ranges (see Figure 6). Use protection diodes when a high voltage op amp is used.

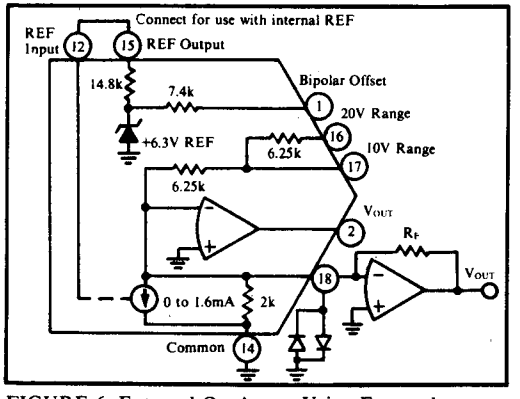

FIGURE 6. External Op Amp - Using External Feedback Resistors.

VOLTAGE OUTPUT OPERATION USING INTERNAL AMPLIFIER

The DAC82 contains internal scaling resistors to provide a wide range of output voltage ranges. These resistors may be connected to provide 3 bipolar output ranges of ±10, ±5, or ±2.5 volts or two unipolar output voltage ranges of 0 to +5 or 0 to +10 volts. Gain and offset drift errors are minimized since these scaling resistors are an integral part of the DAC. Connections for DAC82 output voltage ranges are shown in Table IV and Figure 7 below.

OUTPUT RANGE	DIGITAL INPUT CODES	CONNECT PIN 2 TO	CONNECT PIN 1 TO	CONNECT PIN 16 TO
±10V	COB or CTC	16	18	2
±5V	COB or CTC	17	18	N.C.
±2.5V	COB or CTC	17	18	18
0 to +10V	CSB	17	Common	N.C.
0 to +5V	CSB	17	Common	18

TABLE IV. Voltage Ranges of Current Output DAC82 with External Op Amp.

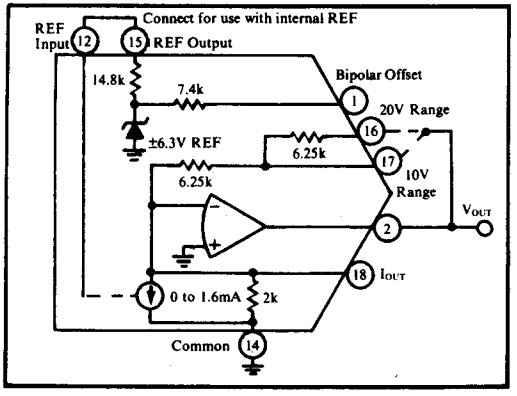

FIGURE 7. Voltage Output Using Internal Amplifier.

OPERATION AS MULTIPLYING DAC

By using an external voltage reference, the DAC82 can be connected as a multiplying DAC, such that the analog output represents the product of the digital input and the analog reference input. To operate the DAC82 as a two quadrant MDAC, connect the unit as shown in Figure 8. If R2, the bipolar offset resistor, is replaced with an open circuit, the DAC will operate in one quadrant. Table V below shows the digital input and analog output relationships for one quadrant and two quadrant multiplication and Figure 8 shows the connection for output voltage or output current. Since the absolute temperature coefficient of the internal feedback resistors (6.25k) is typically 30 ppm/°C, improved temperature stability can be achieved by using an external 13.5k resistor connected between pins 2 and pins 18, making no connection to pins 16 or 17.

DIGITAL INPUT CODES	OUTPUT RANGE			
	VOLTAGE*		CURRENT	
MSB LSB	0 to +10V	±10V	0 to -1.6mA	±0.8mA
00000000	$\frac{(4\ V_R)(R_F)}{(R_1)}(0.9961)$	$\frac{(4\ V_R)(R_1)}{(R_1)}(0.9922)$	$\frac{(4\ V_R)}{(R_1)}(0.9961)$	$\frac{(4\ V_R)}{(R_1)}(0.9922)$
01111111	$\frac{(4\ V_R)(R_F)}{(R_1)}(0.5000)$	0.0000	$\frac{(4\ V_R)}{(R_1)}(0.5000)$	0.0000
10000000	$\frac{(4\ V_R)(R_F)}{(R_1)}(0.4961)$	$\frac{(4\ V_R)(R_F)}{(R_1)}(-0.0078)$	$\frac{(4\ V_R)}{(R_1)}(0.4961)$	$\frac{(4\ V_R)}{(R_1)}(-0.0078)$
11111111	0.0000	$\frac{(4\ V_R)(R_1)}{(R_1)}(-1)$	0.0000	$\frac{(4\ V_R)}{(R_1)}(-1)$
1 LSB	$\frac{(4\ V_R)(R_F)}{(R_1)}(0.0039)$	$\frac{(4\ V_R)(R_1)}{(R_1)}(0.0078)$	$\frac{(4\ V_R)}{(R_1)}(0.0039)$	$\frac{(4\ V_R)}{(R_1)}(0.0078)$

TABLE V. Digital Input and Analog Output Relationship for Multiplying Configuration.

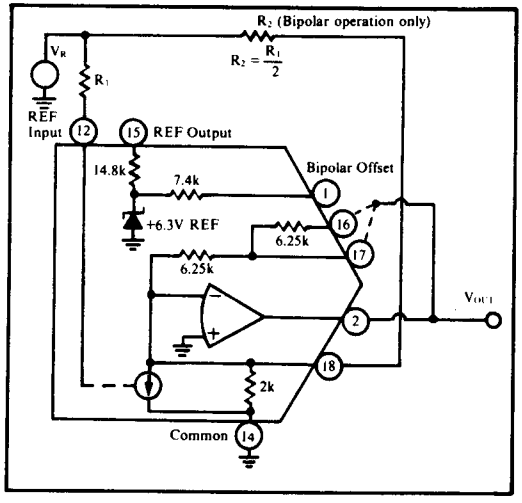

FIGURE 8. Connection for Multiplying Mode.

OPTIONAL EXTERNAL OFFSET AND GAIN ADJUSTMENTS

The DAC82 has been laser trimmed at the factory to insure absolute accuracy of 1 LSB at +25°C. However, externally connected offset and gain potentiometers may be used to null these error components to zero. If these adjustments are not used, simply leave the pins open. Adjustment networks should be located physically closed to the DAC82 to minimize signal pickup.

OFFSET ADJUSTMENT

For unipolar operation, apply the digital input code that should give zero volts output and adjust the OFFSET potentiometer for zero volts output. For bipolar operation, apply the digital input code that should give the maximum negative voltage output. Example: If the FULL SCALE RANGE is connected for 20 volts, then the maximum negative voltage output is -10 volts. See Table I for corresponding codes.

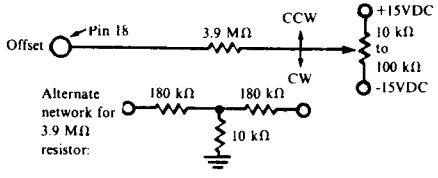

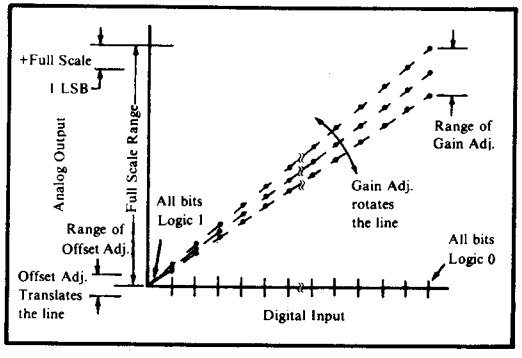

FIGURE 9. Relationship of OFFSET and GAIN Adjustments for a UNIPOLAR D/A Converter.

GAIN ADJUSTMENT

For either unipolar or bipolar D/A converters, apply the digital input that should give the maximum positive voltage output. Adjust the GAIN potentiometer for this positive full scale voltage. The positive full scale voltages for the DAC82 are given in Table V.

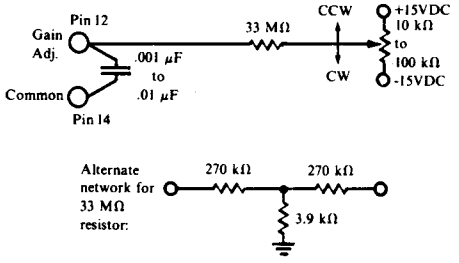

Range of Offset Adjustment: ±0.2% of FSR

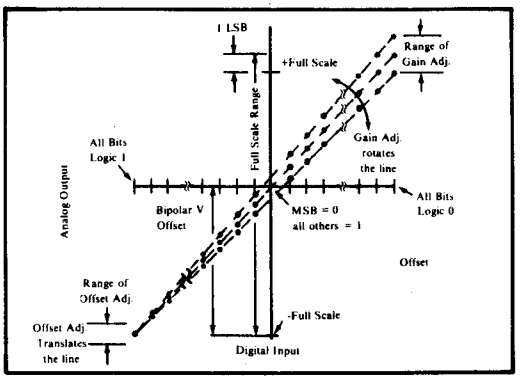

FIGURE 10. Relationship of OFFSET and GAIN Adjustments for a BIPOLAR D/A Converter.

APPLICATIONS

Two DAC82's can be connected as shown to construct a digitally-controlled attenuator which will accept bipolar input voltages. Since the input to the DAC is a summing junction (pin 12), input voltages greater than ±10V can be used if R_{IN} is increased proportionately. The transfer function is:

$$\frac{V_{OUT}}{V_{IN}} = \left(\frac{4\,R_{FB}}{R_{IN}}\right)\left(\frac{A_{BINARY}}{256}\right)$$

To remove initial gain errors, the two 15k resistors should be adjusted such that 0.2 mA flows into pin 12 of each DAC82 when $V_{IN} = 0$.

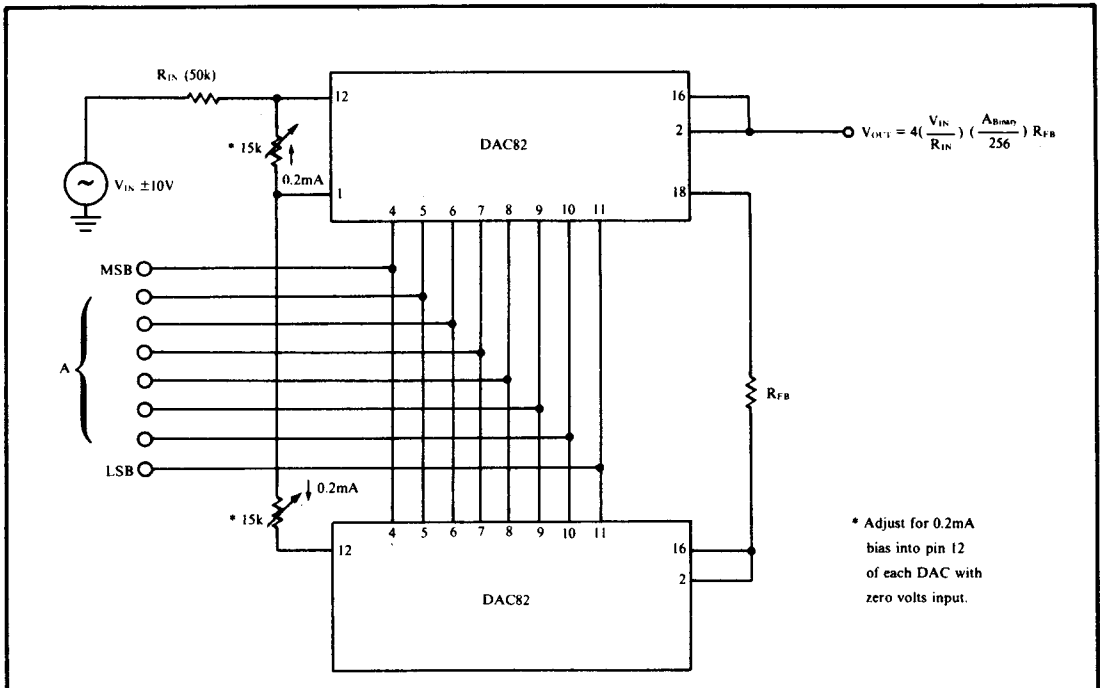

DIGITALLY CONTROLLED ATTENUATOR WITH BIPOLAR INPUT