Data Sheet | September 1998 | File Number 2922.3

Quad, 3.5MHz, Operational Amplifier

HA-4741, which contains four amplifiers on a monolithic chip, provides a new measure of performance for general purpose operational amplifiers. Each amplifier in the HA-4741 has operating specifications that equal or exceed those of the 741-type amplifier in all categories of performance.

HA-4741 is well suited to applications requiring accurate signal processing by virtue of its low values of input offset voltage (0.5mV), input bias current (60nA) and input voltage noise (9nV/$\sqrt{Hz}$ at 1kHz). 3.5MHz bandwidth, coupled with high open-loop gain, allow the HA-4741 to be used in designs requiring amplification of wide band signals, such as audio amplifiers. Audio application is further enhanced by the HA-4741's negligible output crossover distortion.

These excellent dynamic characteristics also make the HA-4741 ideal for a wide range of active filter designs. Performance integrity of multi-channel designs is assured by a high level of amplifier-to-amplifier isolation (69dB at 10kHz).

A wide range of supply voltages (±2V to ±20V) can be used to power the HA-4741, making it compatible with almost any system including battery-powered equipment.

HA-4741/883 product and data sheets available upon request.

Ordering Information

PART NUMBER	TEMP. RANGE (^{o}C)	PACKAGE	PKG. NO.
HA1-4741-2	-55 to 125	14 Ld CERDIP	F14.3
HA1-4741-5	0 to 75	14 Ld CERDIP	F14.3
HA3-4741-5	0 to 75	14 Ld PDIP	E14.3
HA9P4741-9	-40 to 85	16 Ld SOIC	M16.3

Features

- Slew Rate 1.6V/µs
- Bandwidth 3.5MHz
- Input Voltage Noise . . . . . 9nV/$\sqrt{Hz}$
- Input Offset Voltage 0.5mV
- Input Bias Current 60nA
- Supply Range . . . . . ±2V to ±20V
- No Crossover Distortion
- Standard Quad Pinout

Applications

- Universal Active Filters
- D3 Communications Filters
- Audio Amplifiers
- Battery-Powered Equipment

Pinouts

HA-4741
(PDIP, CERDIP)
TOP VIEW

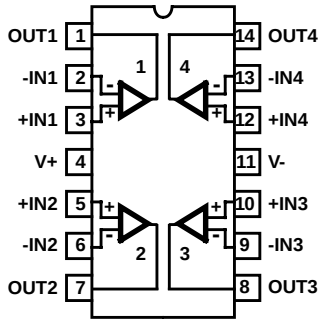

HA-4741
(SOIC)
TOP VIEW

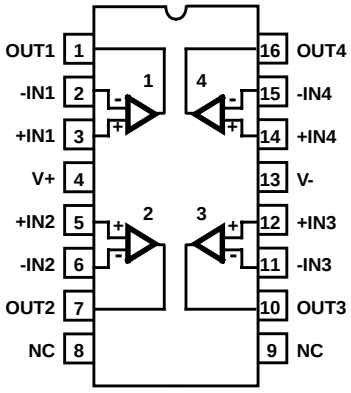

CAUTION: These devices are sensitive to electrostatic discharge; follow proper IC Handling Procedures.
1-888-INTERSIL or 321-724-7143 | Copyright © Intersil Corporation 1999

Absolute Maximum Ratings

$T_A = 25^oC$ Unless Otherwise Stated
Supply Voltage Between V+ and V- Terminals 40V
Differential Input Voltage 30V
Input Voltage . . . . . V_{SUPPLY}
Output Short Circuit Duration (Note 3). . . . . Indefinite

Operating Conditions

Temperature Range:
HA-4741-2 . . . . . -55^oC to 125^oC
HA-4741-5 . . . . . 0^oC to 75^oC
HA-4741-9 . . . . . -40^oC to 85^oC

Thermal Information

Thermal Resistance (Typical, Note 2)	θ_{JA} ($^oC/W$)	θ_{JC} ($^oC/W$)
CERDIP Package	90	35
PDIP Package	107	N/A
SOIC Package	96	N/A

Maximum Junction Temperature (Ceramic Package, Note 1) . . . . .175^oC
Maximum Junction Temperature (Plastic Packages, Note 1) . . . . .150^oC
Maximum Storage Temperature Range . . . . . -65^oC to 150^oC
Maximum Lead Temperature (Soldering 10s) . . . . . 300^oC
(SOIC - Lead Tips Only)

CAUTION: Stresses above those listed in "Absolute Maximum Ratings" may cause permanent damage to the device. This is a stress only rating and operation of the device at these or any other conditions above those indicated in the operational sections of this specification is not implied.

NOTES:

1. Maximum power dissipation, including output load, must be designed to maintain junction temperature below 175^oC for the ceramic package, and below 150^oC for the plastic packages.
2. θ_{JA} is measured with the component mounted on an evaluation PC board in free air.
3. One amplifier may be shorted to ground indefinitely.

Electrical Specifications $V_{SUPPLY} = \pm15V$, Unless Otherwise Specified

PARAMETER	TEST CONDITIONS	TEMP. (^oC)	HA-4741-2			HA-4741-5			(NOTE 4) HA-4741-9	UNITS
			MIN	TYP	MAX	MIN	TYP	MAX	MAX	
INPUT CHARACTERISTICS										
Offset Voltage		25	-	0.5	3	-	1	5	5	mV
		Full	-	4	5	-	4	6.5	8.5	mV
Average Offset Voltage Drift		Full	-	5	-	-	5	-	-	$\mu V/^oC$
Bias Current		25	-	60	200	-	60	300	300	nA
		Full	-	-	325	-	-	400	400	nA
Offset Current		25	-	15	30	-	30	50	50	nA
		Full	-	-	75	-	-	100	100	nA
Common Mode Range		Full	±12	-	-	±12	-	-	-	V
Differential Input Resistance		25	-	0.5	-	-	0.5	-	-	MΩ
Input Voltage Noise	f = 1kHz	25	-	9	-	-	9	-	-	$nV/\sqrt{Hz}$
TRANSFER CHARACTERISTICS										
Large Signal Voltage Gain	$V_{OUT} = \pm10V$, $R_L = 2k\Omega$	25	50	100	-	25	50	-	-	kV/V
		Full	25	-	-	15	-	-	-	kV/V
Common Mode Rejection Ratio		25	80	95	-	80	95	-	-	dB
		Full	74	-	-	74	-	-	-	dB
Channel Separation (Note 5)		25	66	69	-	66	69	-	-	dB
Small Signal Bandwidth		25	2.5	3.5	-	2.5	3.5	-	-	MHz
OUTPUT CHARACTERISTICS										
Output Voltage Swing	$R_L = 10k\Omega$	Full	±12	±13.7	-	±12	±13.7	-	-	V
Output Voltage Swing	$R_L = 2k\Omega$	Full	±10	±12.5	-	±10	±12.5	-	-	V
Full Power Bandwidth (Notes 6, 7)		25	-	25	-	-	25	-	-	kHz
Output Current	$V_{OUT} = \pm10V$	Full	±5	±15	-	±5	±15	-	-	mA
Output Resistance		25	-	300	-	-	300	-	-	Ω

Electrical Specifications V_{SUPPLY} = ±15V, Unless Otherwise Specified **(Continued)**

PARAMETER	TEST CONDITIONS	TEMP. (^oC)	HA-4741-2			HA-4741-5			(NOTE 4) HA-4741-9	UNITS
			MIN	TYP	MAX	MIN	TYP	MAX	MAX	
TRANSIENT RESPONSE R_L = 2kΩ, C_L = 50pF										
Rise Time	V_{OUT} = ±200mV	25	-	75	140	-	75	140	140	ns
Overshoot		25	-	25	40	-	25	40	40	%
Slew Rate	V_{OUT} = ±5V	25	-	±1.6	-	-	±1.6	-	-	V/µs
POWER SUPPLY CHARACTERISTICS										
Supply Current		25	-	4.5	5	-	5	7	7	mA
Power Supply Rejection Ratio	ΔV_S = ±5V	Full	80	95	-	80	95	-	-	dB

NOTES:

4. Typical and Minimum specifications for the -9 version are the same as those for the -5 version.
5. Referred to input; f = 10kHz, R_S = 1kΩ, V_{IN} = 100mV_{PEAK}.
6. V_{OUT} = ±10V, R_L = 2kΩ.
7. Full power bandwidth guaranteed based upon slew rate measurement: FPBW = S.R./2π V_{PEAK}.

Test Circuit and Waveforms

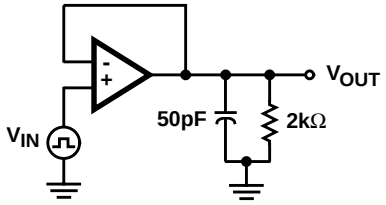

FIGURE 1. SMALL AND LARGE SIGNAL TEST CIRCUIT

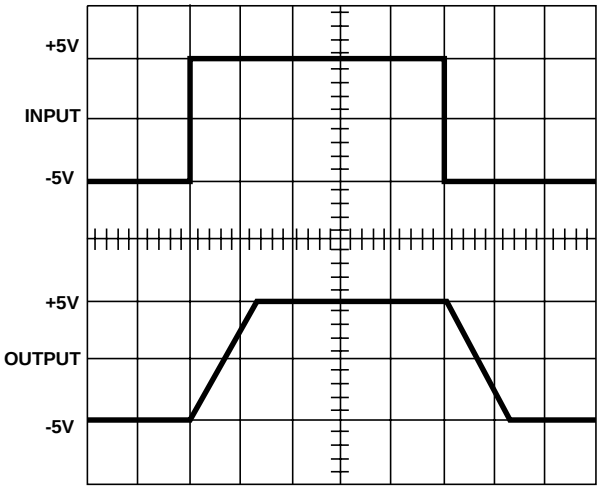

Volts = 5V/Div., Time = 5µs/Div.

FIGURE 2. LARGE SIGNAL RESPONSE

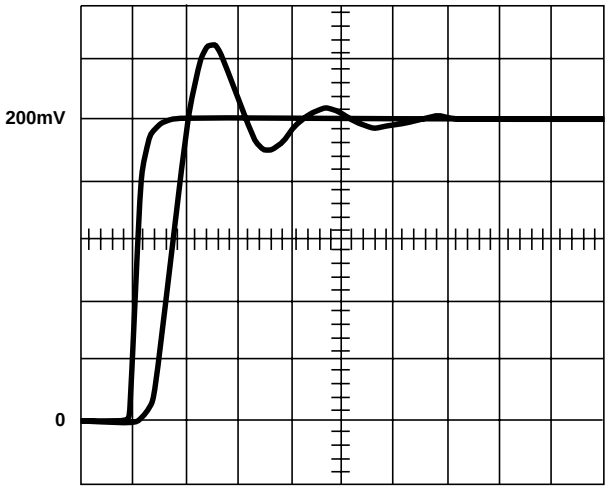

Volts = 40mV/Div., Time = 100ns/Div.

FIGURE 3. SMALL SIGNAL RESPONSE

Schematic Diagram

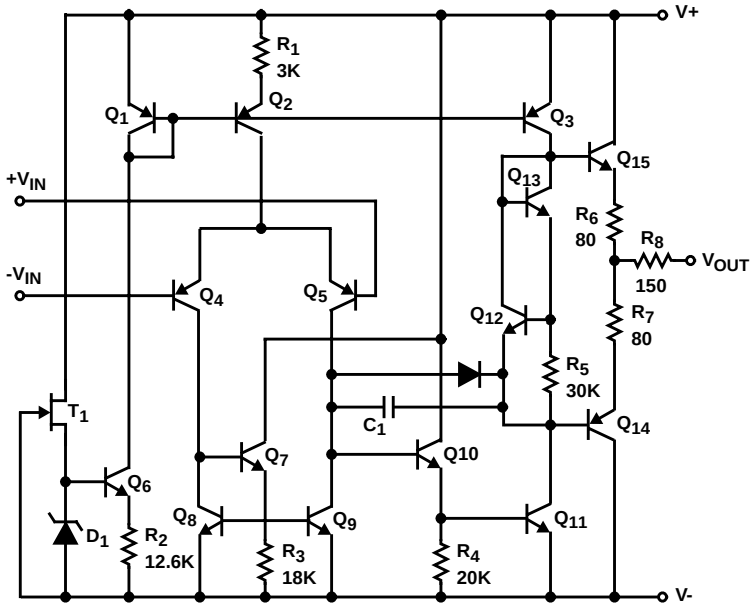

Typical Performance Curves $V_{SUPPLY} = \pm15V$, $T_A = 25^oC$, Unless Otherwise Specified

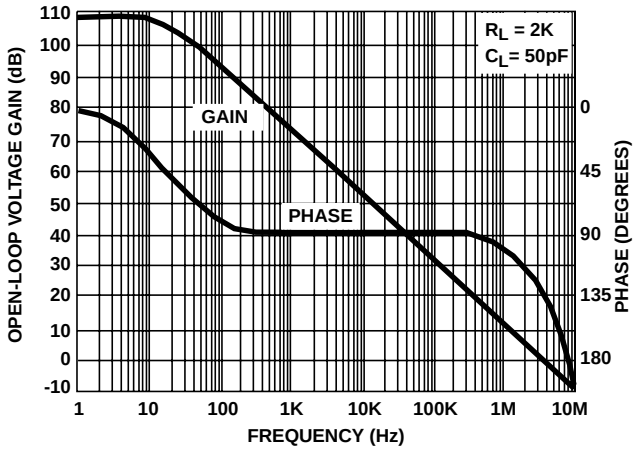

FIGURE 4. OPEN LOOP FREQUENCY RESPONSE

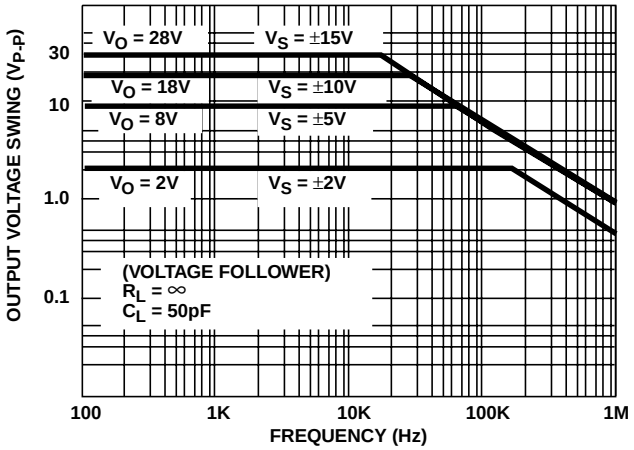

FIGURE 5. OUTPUT VOLTAGE SWING vs FREQUENCY

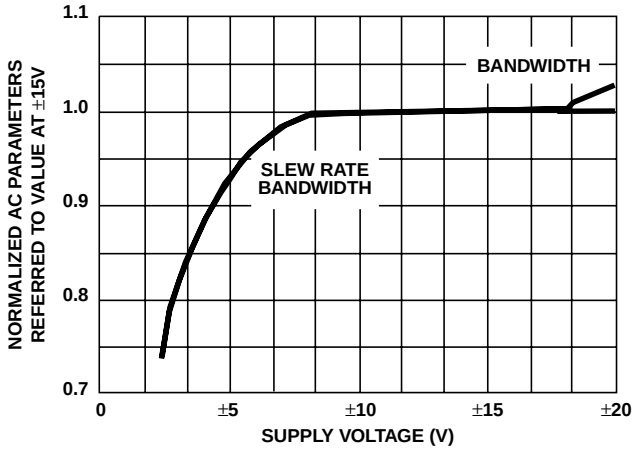

FIGURE 6. NORMALIZED AC PARAMETERS vs SUPPLY VOLTAGE

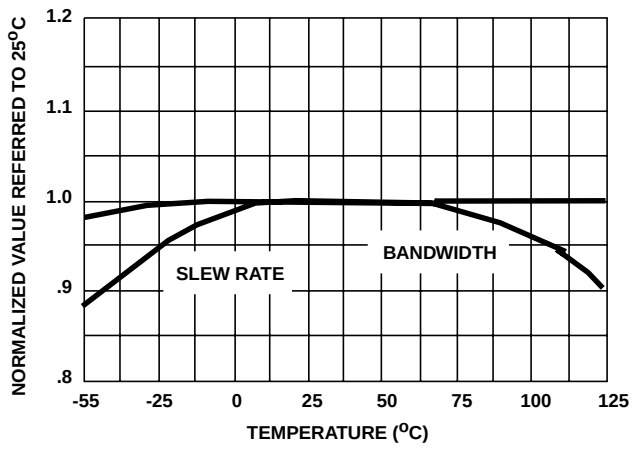

FIGURE 7. NORMALIZED AC PARAMETERS vs TEMPERATURE

Typical Performance Curves $V_{SUPPLY} = \pm15V$, $T_A = 25^oC$, Unless Otherwise Specified **(Continued)**

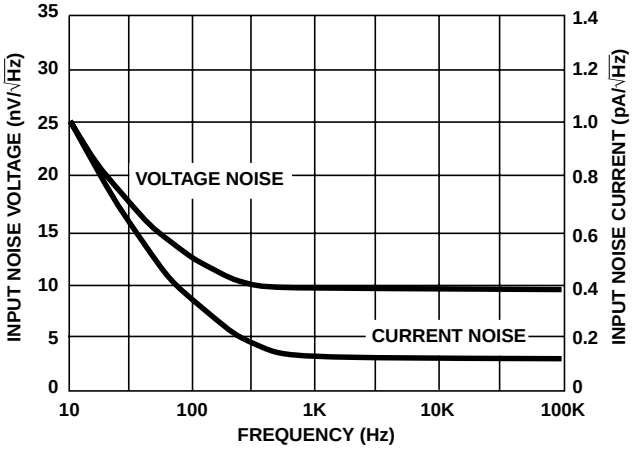

FIGURE 8. INPUT NOISE vs FREQUENCY

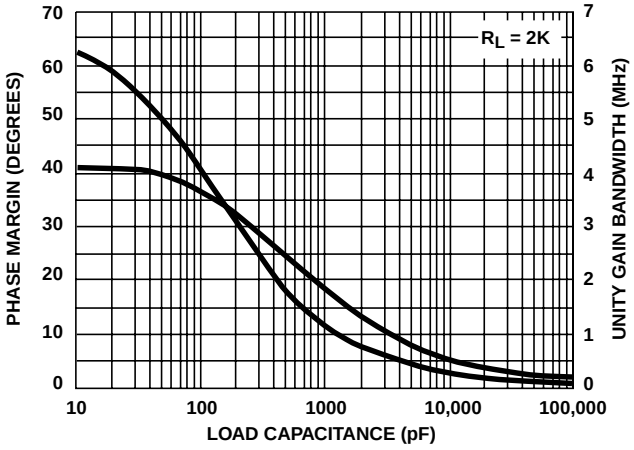

FIGURE 9. SMALL SIGNAL BANDWIDTH AND PHASE MARGIN vs LOAD CAPACITANCE

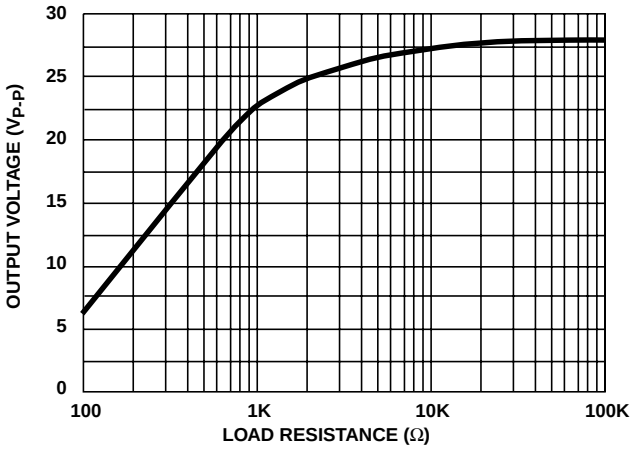

FIGURE 10. MAXIMUM OUTPUT VOLTAGE SWING vs LOAD RESISTANCE

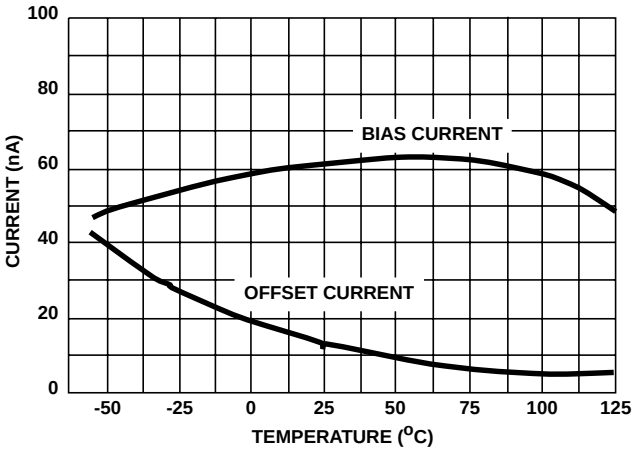

FIGURE 11. INPUT BIAS AND OFFSET CURRENT vs TEMPERATURE

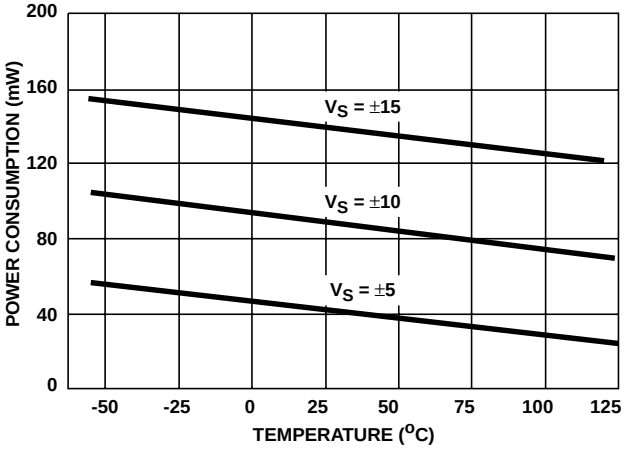

FIGURE 12. POWER CONSUMPTION vs TEMPERATURE

Die Characteristics

DIE DIMENSIONS:

87 mils x 75 mils x 19 mils
2210µm x 1910µm x 483µm

METALLIZATION:

Type: Al, 1% Cu
Thickness: 16kÅ ±2kÅ

PASSIVATION:

Type: Nitride (Si_3N_4) over Silox (SiO_2, 5% Phos.)
Silox Thickness: 12kÅ ±2kÅ
Nitride Thickness: 3.5kÅ ±1.5kÅ

SUBSTRATE POTENTIAL (Powered Up):

V-

TRANSISTOR COUNT:

72

PROCESS:

Junction Isolated Bipolar/JFET

Metallization Mask Layout

HA-4741

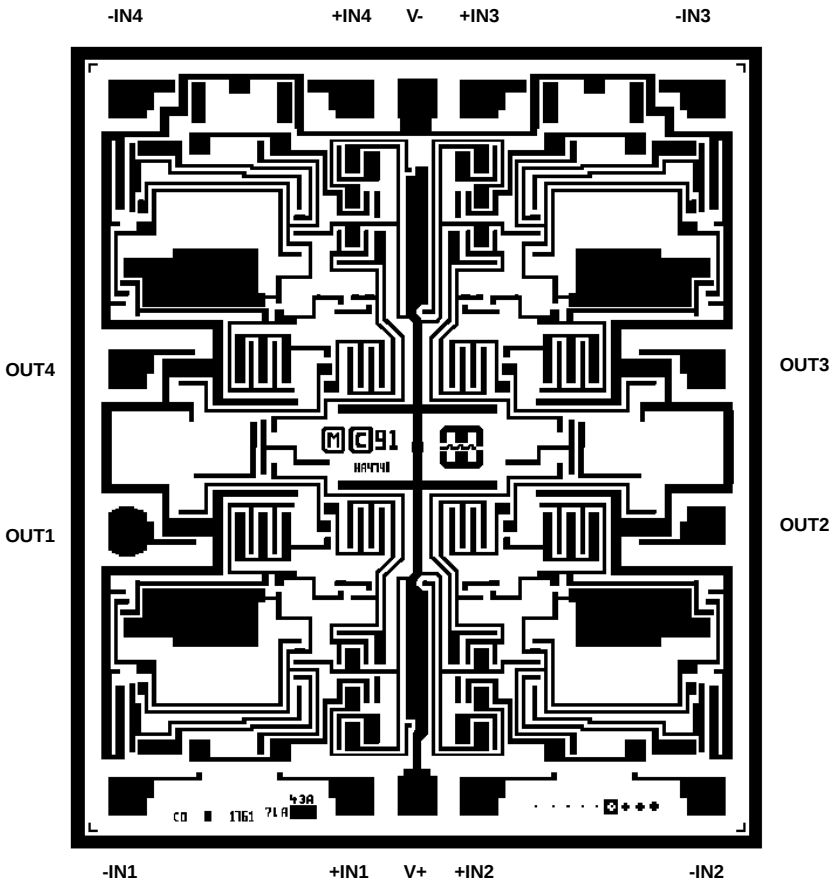

All Intersil semiconductor products are manufactured, assembled and tested under **ISO9000** quality systems certification.

Intersil semiconductor products are sold by description only. Intersil Corporation reserves the right to make changes in circuit design and/or specifications at any time without notice. Accordingly, the reader is cautioned to verify that data sheets are current before placing orders. Information furnished by Intersil is believed to be accurate and reliable. However, no responsibility is assumed by Intersil or its subsidiaries for its use; nor for any infringements of patents or other rights of third parties which may result from its use. No license is granted by implication or otherwise under any patent or patent rights of Intersil or its subsidiaries.

For information regarding Intersil Corporation and its products, see web site **http://www.intersil.com**