MC14025B (see Page 6-5)
MC14025UB (see Page 6-14)

MC14027B

Dual J-K Flip-Flop

The MC14027B dual J–K flip–flop has independent J, K, Clock (C), Set (S) and Reset (R) inputs for each flip–flop. These devices may be used in control, register, or toggle functions.

- Diode Protection on All Inputs
- Supply Voltage Range = 3.0 Vdc to 18 Vdc
- Logic Swing Independent of Fanout
- Logic Edge–Clocked Flip–Flop Design —
  Logic state is retained indefinitely with clock level either high or low; information is transferred to the output only on the positive–going edge of the clock pulse
- Capable of Driving Two Low–power TTL Loads or One Low–power Schottky TTL Load Over the Rated Temperature Range
- Pin–for–Pin Replacement for CD4027B

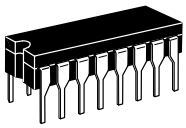

L SUFFIX
CERAMIC
CASE 620

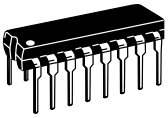

P SUFFIX
PLASTIC
CASE 648

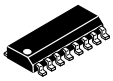

D SUFFIX
SOIC
CASE 751B

ORDERING INFORMATION

MC14XXXBCP	Plastic
MC14XXXBCL	Ceramic
MC14XXXBD	SOIC

T_A = – 55° to 125°C for all packages.

MAXIMUM RATINGS* (Voltages Referenced to V_{SS})

Symbol	Parameter	Value	Unit
V_{DD}	DC Supply Voltage	– 0.5 to + 18.0	V
V_{in}, V_{out}	Input or Output Voltage (DC or Transient)	– 0.5 to V_{DD} + 0.5	V
I_{in}, I_{out}	Input or Output Current (DC or Transient), per Pin	± 10	mA
P_D	Power Dissipation, per Package†	500	mW
T_{stg}	Storage Temperature	– 65 to + 150	°C
T_L	Lead Temperature (8–Second Soldering)	260	°C

* Maximum Ratings are those values beyond which damage to the device may occur.
†Temperature Derating:
Plastic "P and D/DW" Packages: – 7.0 mW/°C From 65°C To 125°C
Ceramic "L" Packages: – 12 mW/°C From 100°C To 125°C

TRUTH TABLE

Inputs						Outputs*		
C†	J	K	S	R	Q_n‡	Q_{n+1}	$\overline{Q_{n+1}}$	
↑	1	X	0	0	0	1	0	
↑	X	0	0	0	1	1	0	
↑	0	X	0	0	0	0	1	
↑	X	1	0	0	1	0	1	
↑	1	1	0	0	Qo	$\overline{Qo}$	Qo	
↓	X	X	0	0	X	Q_n	$\overline{Q_n}$	No Change
X	X	X	1	0	X	1	0	
X	X	X	0	1	X	0	1	
X	X	X	1	1	X	1	1	

X = Don't Care
† = Level Change
‡ = Present State
* = Next State

BLOCK DIAGRAM

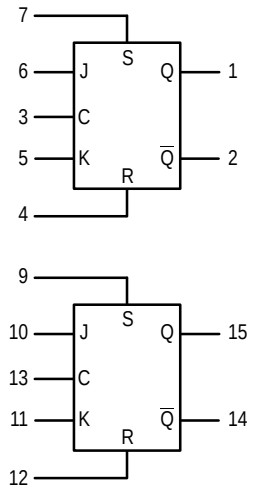

V_{DD} = PIN 16
V_{SS} = PIN 8

This device contains protection circuitry to guard against damage due to high static voltages or electric fields. However, precautions must be taken to avoid applications of any voltage higher than maximum rated voltages to this high-impedance circuit. For proper operation, V_{in} and V_{out} should be constrained to the range $V_{SS} \leq (V_{in}$ or $V_{out}) \leq V_{DD}$.
Unused inputs must always be tied to an appropriate logic voltage level (e.g., either V_{SS} or V_{DD}). Unused outputs must be left open.

REV 3
1/94

© Motorola, Inc. 1995

ELECTRICAL CHARACTERISTICS (Voltages Referenced to V_{SS})

Characteristic	Symbol	V_{DD} Vdc	– 55°C Min	– 55°C Max	25°C Min	25°C Typ #	25°C Max	125°C Min	125°C Max	Unit
Output Voltage "0" Level V_{in} = V_{DD} or 0	V_{OL}	5.0 10 15	— — —	0.05 0.05 0.05	— — —	0 0 0	0.05 0.05 0.05	— — —	0.05 0.05 0.05	Vdc
V_{in} = 0 or V_{DD} "1" Level	V_{OH}	5.0 10 15	4.95 9.95 14.95	— — —	4.95 9.95 14.95	5.0 10 15	— — —	4.95 9.95 14.95	— — —	Vdc
Input Voltage "0" Level (V_O = 4.5 or 0.5 Vdc) (V_O = 9.0 or 1.0 Vdc) (V_O = 13.5 or 1.5 Vdc)	V_{IL}	 5.0 10 15	 — — —	 1.5 3.0 4.0	 — — —	 2.25 4.50 6.75	 1.5 3.0 4.0	 — — —	 1.5 3.0 4.0	Vdc
(V_O = 0.5 or 4.5 Vdc) "1" Level (V_O = 1.0 or 9.0 Vdc) (V_O = 1.5 or 13.5 Vdc)	V_{IH}	5.0 10 15	3.5 7.0 11	— — —	3.5 7.0 11	2.75 5.50 8.25	— — —	3.5 7.0 11	— — —	Vdc
Output Drive Current (V_{OH} = 2.5 Vdc) Source (V_{OH} = 4.6 Vdc) (V_{OH} = 9.5 Vdc) (V_{OH} = 13.5 Vdc)	I_{OH}	 5.0 5.0 10 15	 – 3.0 – 0.64 – 1.6 – 4.2	 — — — —	 – 2.4 – 0.51 – 1.3 – 3.4	 – 4.2 – 0.88 – 2.25 – 8.8	 — — — —	 – 1.7 – 0.36 – 0.9 – 2.4	 — — — —	mAdc
(V_{OL} = 0.4 Vdc) Sink (V_{OL} = 0.5 Vdc) (V_{OL} = 1.5 Vdc)	I_{OL}	5.0 10 15	0.64 1.6 4.2	— — —	0.51 1.3 3.4	0.88 2.25 8.8	— — —	0.36 0.9 2.4	— — —	mAdc
Input Current	I_{in}	15	—	± 0.1	—	±0.00001	± 0.1	—	± 1.0	µAdc
Input Capacitance (V_{in} = 0)	C_{in}	—	—	—	—	5.0	7.5	—	—	pF
Quiescent Current (Per Package)	I_{DD}	5.0 10 15	— — —	1.0 2.0 4.0	— — —	0.002 0.004 0.006	1.0 2.0 4.0	— — —	30 60 120	µAdc
Total Supply Current**† (Dynamic plus Quiescent, Per Package) (C_L = 50 pF on all outputs, all buffers switching)	I_T	5.0 10 15	I_T = (0.8 µA/kHz) f + I_{DD} I_T = (1.6 µA/kHz) f + I_{DD} I_T = (2.4 µA/kHz) f + I_{DD}							µAdc

#Data labelled "Typ" is not to be used for design purposes but is intended as an indication of the IC's potential performance.

**The formulas given are for the typical characteristics only at 25°C.

†To calculate total supply current at loads other than 50 pF:

$$I_T(C_L) = I_T(50\ pF) + (C_L - 50)\ Vfk$$

where: I_T is in µA (per package), C_L in pF, V = (V_{DD} – V_{SS}) in volts, f in kHz is input frequency, and k = 0.002.

PIN ASSIGNMENT

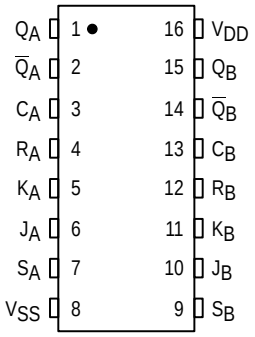

SWITCHING CHARACTERISTICS* (C_L = 50 pF, T_A = 25°C)

Characteristic	Symbol	V_{DD}	Min	Typ #	Max	Unit
Output Rise and Fall Time	t_{TLH}, t_{THL}					ns
t_{TLH}, t_{THL} = (1.5 ns/pF) C_L + 25 ns		5.0	—	100	200	
t_{TLH}, t_{THL} = (0.75 ns/pF) C_L + 12.5 ns		10	—	50	100	
t_{TLH}, t_{THL} = (0.55 ns/pF) C_L + 12.5 ns		15	—	40	80	
Propagation Delay Times**	t_{PLH}, t_{PHL}					ns
Clock to Q, Q						
t_{PLH}, t_{PHL} = (1.7 ns/pF) C_L + 90 ns		5.0	—	175	350	
t_{PLH}, t_{PHL} = (0.66 ns/pF) C_L + 42 ns		10	—	75	150	
t_{PLH}, t_{PHL} = (0.5 ns/pF) C_L + 25 ns		15	—	50	100	
Set to Q, Q						
t_{PLH}, t_{PHL} = (1.7 ns/pF) C_L + 90 ns		5.0	—	175	350	
t_{PLH}, t_{PHL} = (0.66 ns/pF) C_L + 42 ns		10	—	75	150	
t_{PLH}, t_{PHL} = (0.5 ns/pF) C_L + 25 ns		15	—	50	100	
Reset to Q, Q						
t_{PLH}, t_{PHL} = (1.7 ns/pF) C_L + 265 ns		5.0	—	350	450	
t_{PLH}, t_{PHL} = (0.66 ns/pF) C_L + 67 ns		10	—	100	200	
t_{PLH}, t_{PHL} = (0.5 ns/pF) C_L + 50 ns		15	—	75	150	
Setup Times	t_{su}	5.0	140	70	—	ns
		10	50	25	—	
		15	35	17	—	
Hold Times	t_h	5.0	140	70	—	ns
		10	50	25	—	
		15	35	17	—	
Clock Pulse Width	t_{WH}, t_{WL}	5.0	330	165	—	ns
		10	110	55	—	
		15	75	38	—	
Clock Pulse Frequency	f_{cl}	5.0	—	3.0	1.5	MHz
		10	—	9.0	4.5	
		15	—	13	6.5	
Clock Pulse Rise and Fall Time	t_{TLH}, t_{THL}	5.0	—	—	15	µs
		10	—	—	5.0	
		15	—	—	4.0	
Removal Times	t_{rem}					ns
Set		5	90	10	—	
		10	45	5	—	
		15	35	3	—	
Reset		5	50	– 30	—	
		10	25	– 15	—	
		15	20	– 10	—	
Set and Reset Pulse Width	t_{WH}	5.0	250	125	—	ns
		10	100	50	—	
		15	70	35	—	

* The formulas given are for the typical characteristics only at 25°C.
#Data labelled “Typ” is not to be used for design purposes but is intended as an indication of the IC’s potential performance.

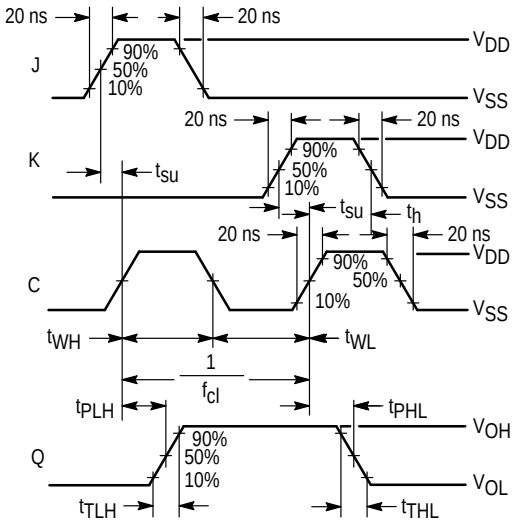

Inputs R and S low.
For the measurement of t_{WH}, I/f_{cl}, and P_D the Inputs J and K are kept high.

Figure 1. Dynamic Signal Waveforms (J, K, Clock, and Output)

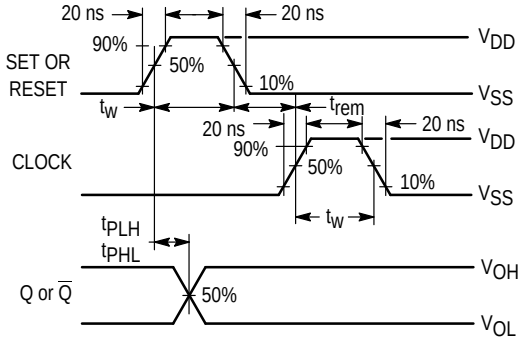

Figure 2. Dynamic Signal Waveforms (Set, Reset, Clock, and Output)

LOGIC DIAGRAM
(1/2 of Device Shown)

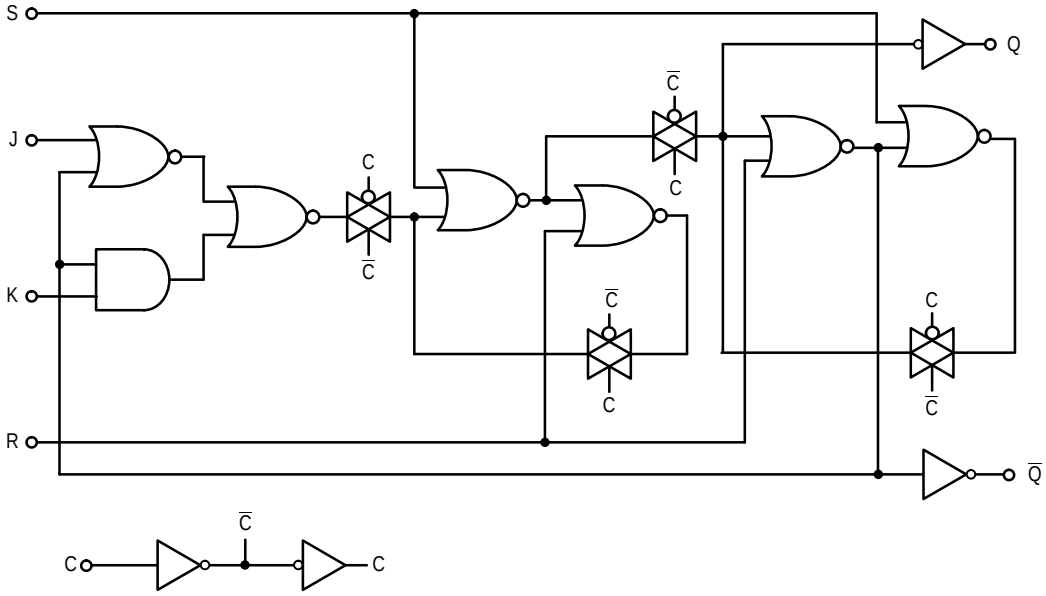

OUTLINE DIMENSIONS

L SUFFIX
CERAMIC DIP PACKAGE
CASE 620–10
ISSUE V

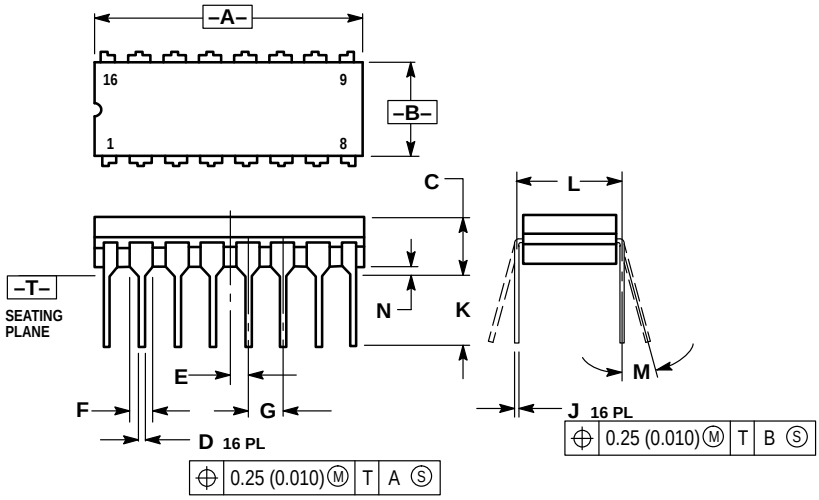

NOTES:
1. DIMENSIONING AND TOLERANCING PER ANSI Y14.5M, 1982.
2. CONTROLLING DIMENSION: INCH.
3. DIMENSION L TO CENTER OF LEAD WHEN FORMED PARALLEL.
4. DIMENSION F MAY NARROW TO 0.76 (0.030) WHERE THE LEAD ENTERS THE CERAMIC BODY.

	INCHES		MILLIMETERS	
DIM	MIN	MAX	MIN	MAX
A	0.750	0.785	19.05	19.93
B	0.240	0.295	6.10	7.49
C	—	0.200	—	5.08
D	0.015	0.020	0.39	0.50
E	0.050 BSC		1.27 BSC	
F	0.055	0.065	1.40	1.65
G	0.100 BSC		2.54 BSC	
H	0.008	0.015	0.21	0.38
K	0.125	0.170	3.18	4.31
L	0.300 BSC		7.62 BSC	
M	0°	15°	0°	15°
N	0.020	0.040	0.51	1.01

P SUFFIX
PLASTIC DIP PACKAGE
CASE 648–08
ISSUE R

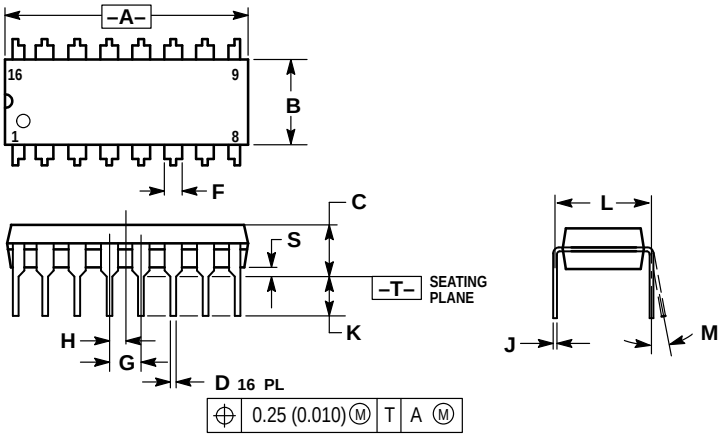

NOTES:
1. DIMENSIONING AND TOLERANCING PER ANSI Y14.5M, 1982.
2. CONTROLLING DIMENSION: INCH.
3. DIMENSION L TO CENTER OF LEADS WHEN FORMED PARALLEL.
4. DIMENSION B DOES NOT INCLUDE MOLD FLASH.
5. ROUNDED CORNERS OPTIONAL.

	INCHES		MILLIMETERS	
DIM	MIN	MAX	MIN	MAX
A	0.740	0.770	18.80	19.55
B	0.250	0.270	6.35	6.85
C	0.145	0.175	3.69	4.44
D	0.015	0.021	0.39	0.53
F	0.040	0.70	1.02	1.77
G	0.100 BSC		2.54 BSC	
H	0.050 BSC		1.27 BSC	
J	0.008	0.015	0.21	0.38
K	0.110	0.130	2.80	3.30
L	0.295	0.305	7.50	7.74
M	0°	10°	0°	10°
S	0.020	0.040	0.51	1.01

OUTLINE DIMENSIONS

D SUFFIX
PLASTIC SOIC PACKAGE
CASE 751B–05
ISSUE J

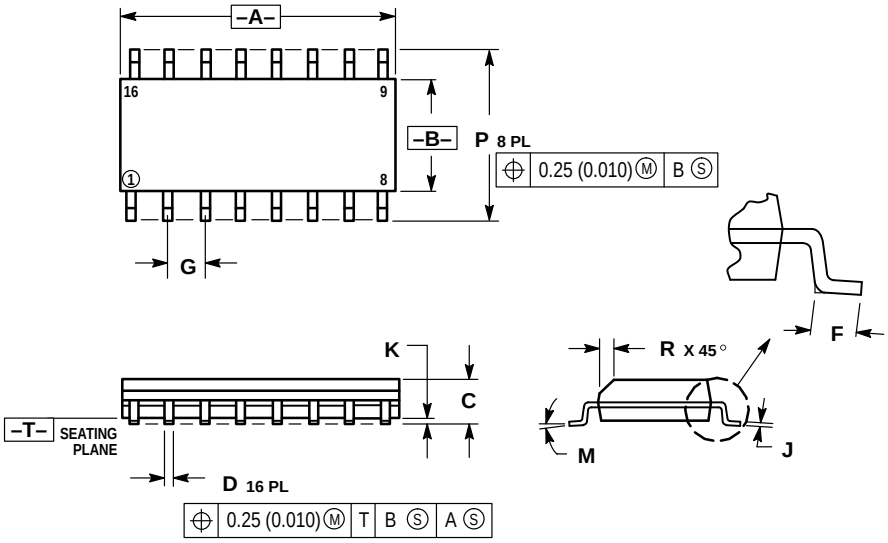

NOTES:
1. DIMENSIONING AND TOLERANCING PER ANSI Y14.5M, 1982.
2. CONTROLLING DIMENSION: MILLIMETER.
3. DIMENSIONS A AND B DO NOT INCLUDE MOLD PROTRUSION.
4. MAXIMUM MOLD PROTRUSION 0.15 (0.006) PER SIDE.
5. DIMENSION D DOES NOT INCLUDE DAMBAR PROTRUSION. ALLOWABLE DAMBAR PROTRUSION SHALL BE 0.127 (0.005) TOTAL IN EXCESS OF THE D DIMENSION AT MAXIMUM MATERIAL CONDITION.

	MILLIMETERS		INCHES	
DIM	MIN	MAX	MIN	MAX
A	9.80	10.00	0.386	0.393
B	3.80	4.00	0.150	0.157
C	1.35	1.75	0.054	0.068
D	0.35	0.49	0.014	0.019
F	0.40	1.25	0.016	0.049
G	1.27 BSC		0.050 BSC	
J	0.19	0.25	0.008	0.009
K	0.10	0.25	0.004	0.009
M	0°	7°	0°	7°
P	5.80	6.20	0.229	0.244
R	0.25	0.50	0.010	0.019

Motorola reserves the right to make changes without further notice to any products herein. Motorola makes no warranty, representation or guarantee regarding the suitability of its products for any particular purpose, nor does Motorola assume any liability arising out of the application or use of any product or circuit, and specifically disclaims any and all liability, including without limitation consequential or incidental damages. “Typical” parameters which may be provided in Motorola data sheets and/or specifications can and do vary in different applications and actual performance may vary over time. All operating parameters, including “Typicals” must be validated for each customer application by customer’s technical experts. Motorola does not convey any license under its patent rights nor the rights of others. Motorola products are not designed, intended, or authorized for use as components in systems intended for surgical implant into the body, or other applications intended to support or sustain life, or for any other application in which the failure of the Motorola product could create a situation where personal injury or death may occur. Should Buyer purchase or use Motorola products for any such unintended or unauthorized application, Buyer shall indemnify and hold Motorola and its officers, employees, subsidiaries, affiliates, and distributors harmless against all claims, costs, damages, and expenses, and reasonable attorney fees arising out of, directly or indirectly, any claim of personal injury or death associated with such unintended or unauthorized use, even if such claim alleges that Motorola was negligent regarding the design or manufacture of the part. Motorola and M are registered trademarks of Motorola, Inc. Motorola, Inc. is an Equal Opportunity/Affirmative Action Employer.

How to reach us:
USA/EUROPE/Locations Not Listed: Motorola Literature Distribution;
P.O. Box 20912; Phoenix, Arizona 85036. 1–800–441–2447 or 602–303–5454

MFAX: RMFAX0@email.sps.mot.com – TOUCHTONE 602–244–6609
INTERNET: http://Design–NET.com

JAPAN: Nippon Motorola Ltd.; Tatsumi–SPD–JLDC, 6F Seibu–Butsuryu–Center, 3–14–2 Tatsumi Koto–Ku, Tokyo 135, Japan. 03–81–3521–8315

ASIA/PACIFIC: Motorola Semiconductors H.K. Ltd.; 8B Tai Ping Industrial Park, 51 Ting Kok Road, Tai Po, N.T., Hong Kong. 852–26629298