BOURNS INC

Model 200
Industrial – Wirewound – Potentiometer
1¼" Long

OBSOLETE

FEATURES

- Lowest cost military quality potentiometer.
- Ideal for computers and laboratory type applications.
- Exceeds steady state humidity requirements of MIL-STD-202.
- Power dissipation — 0.50 watt at 70°C.
- Precision element wound with low temperature coefficient wire.
- Resistance element card has thermal expansion coefficient similar to resistance wire eliminating breakage and strain gage effects.
- Excellent shock, vibration, and acceleration stability due to self-locking adjustment screw.

Actual Size









Panel Mount Model 200 available with leads or solder lugs①

STANDARD RESISTANCES

Resistance (ohms)	Part Numbers* 200L stranded insulated leads	200S solder lugs	200P printed circuit pins	Nominal Resolution (percent)
10	200L-1-100	200S-1-100	200P-1-100	2.70
20	200L-1-200	200S-1-200	200P-1-200	2.16
50	200L-1-500	200S-1-500	200P-1-500	1.65
100	200L-1-101	200S-1-101	200P-1-101	1.32
200	200L-1-201	200S-1-201	200P-1-201	1.06
500	200L-1-501	200S-1-501	200P-1-501	0.80
1,000	200L-1-102	200S-1-102	200P-1-102	0.64
2,000	200L-1-202	200S-1-202	200P-1-202	0.52
5,000	200L-1-502	200S-1-502	200P-1-502	0.41
10,000	200L-1-103	200S-1-103	200P-1-103	0.34
20,000	200L-1-203	200S-1-203	200P-1-203	0.29
25,000	200L-1-253	200S-1-253	200P-1-253	0.27
50,000	200L-1-503	200S-1-503	200P-1-503	0.22
100,000	200L-2-104	Not Available	Not Available	0.16

SPECIAL RESISTANCES AVAILABLE FROM 10 OHMS TO 100K OHMS

① When ordering Panel Mount Model add "M" to part number. Example: 200L-1-103M. See Panel Mount Bulletin for additional details.

*The last three digits of the part number represent the resistance in standard code.

Model 200 TRIMPOT® Potentiometer

SPECIFICATIONS

ELECTRICAL CHARACTERISTICS

Standard Resistance Range	10 ohms to 100,000 ohms
Resistance Tolerance	±10% Standard, closer tolerances available
Absolute Minimum Resistance	
100Ω to 50K	0.7% or 1.0Ω, whichever is greater
100 K	5%
Continuity	Maintained for full mechanical range
Noise During Adjustment	100 ohms ENR maximum
Insulation Resistance, 500 Volts DC	100 megohms minimum
Resolution (See chart on front)	0.16 to 2.70%

ENVIRONMENTAL CHARACTERISTICS

Power Ratings:	
70°C Ambient	0.50 watt
125°C Ambient	0 watt
Operating Temperature Range	—65 to +105°C
Temperature Coefficient (per MIL-R-27208)	100 ppm/°C maximum
Humidity, MIL-STD-202, Method 103B	100 megohms minimum insulation resistance after removal from chamber
Vibration:	MIL-R-27208, 20G
Contact Bounce	0.1 millisecond maximum
Wiper Shift, Maximum	0.5% or resolution
Shock:	MIL-R-27208, 50G
Contact Bounce and Wiper Shift	Same as Vibration
Salt Spray	Materials meet MIL-R-27208
Load Life	1000 hours per MIL-R-27208
Resistance Shift, Maximum	2%
Mechanical Life	500 cycles without discontinuity
Dielectric Strength	MIL-R-27208
Room Conditions	1000 volts AC
80,000 Feet (0.8" Hg)	200 volts AC

PHYSICAL CHARACTERISTICS

Shaft Torque	7.5 oz.-in. maximum
Markings	Manufacturer's name, wiring diagram, date code, resistance and manufacturer's part number (customer's part number optional)
Appearance	Legible markings, no physical defects
Mechanical Adjustment	25 turns nominal
Mechanical Stops	Wiper assembly idles
Weight	Approximately 0.1 oz.
Terminals,	
L	Vinyl insulated stranded leads, 30 AWG (0.024 O.D.) 7 strands/38 AWG
S	Solderable solder lugs
P	Solderable printed circuit pins

Specification Note: Closer performance tolerances can be supplied upon request.

Specifications subject to change without notice.

200L

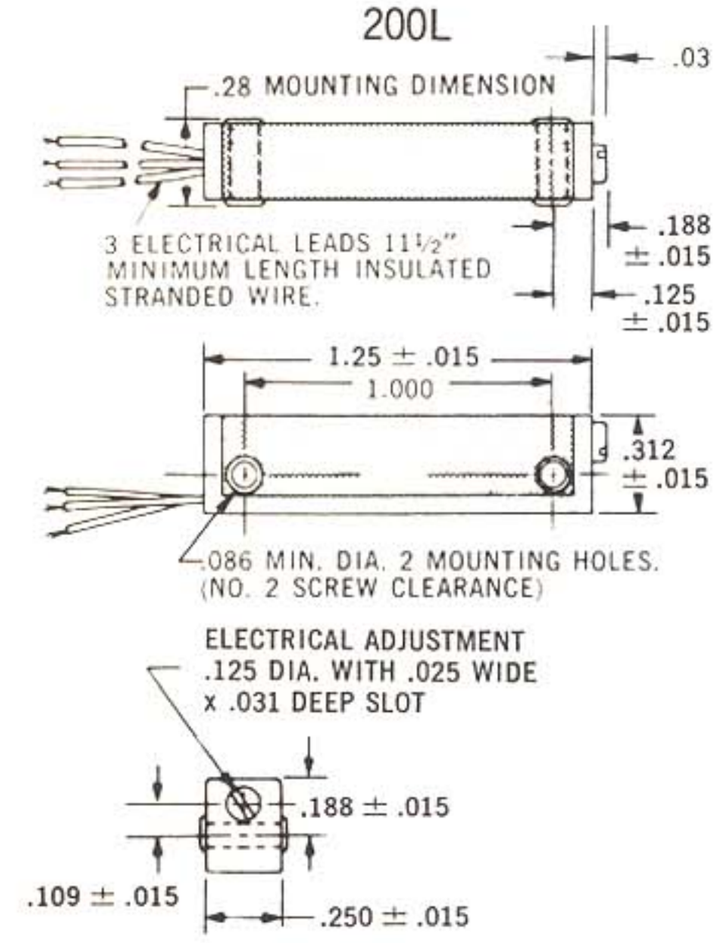

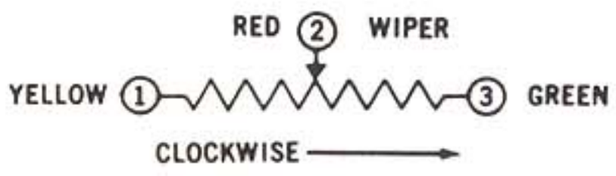

TOLERANCES: DECIMAL .XX±.010 .XXX±.005,

200P

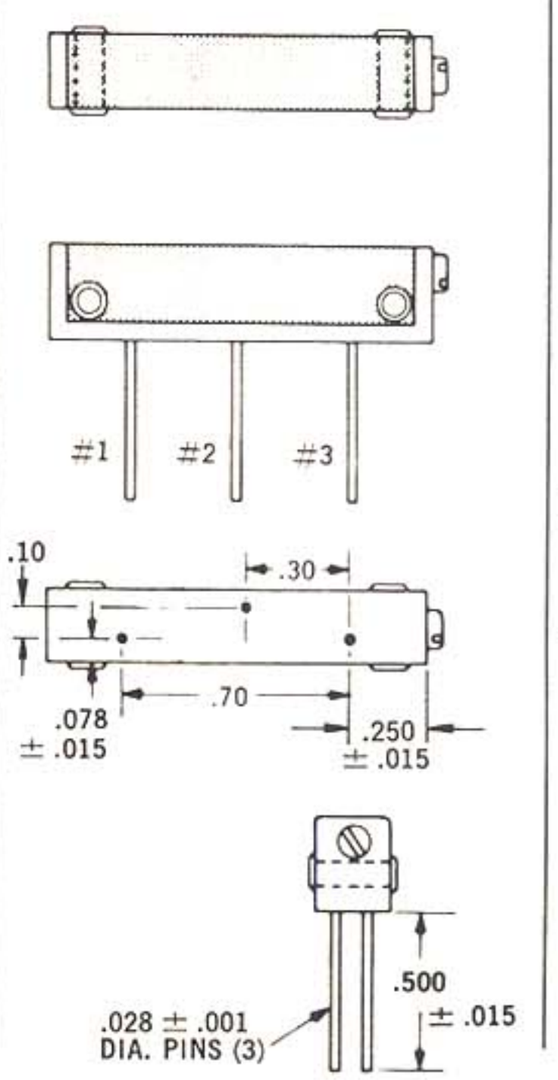

200S

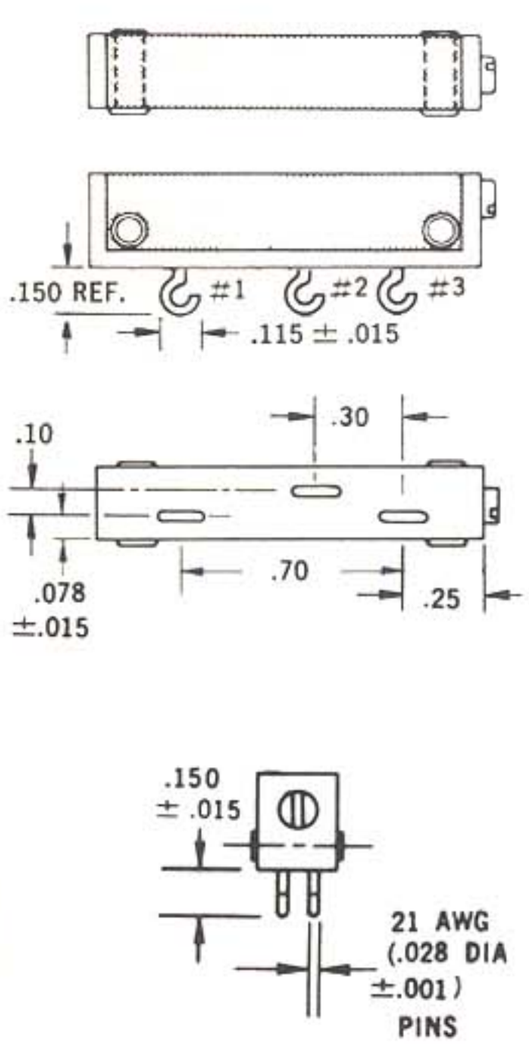

METRIC CONVERSION

IN.	MM
.001	,025
.010	,254
.015	,381
.024	,610
.025	,635
.028	,711
.030	,762
.031	,787
.078	1,981
.086	2,189
.100	2,540
.109	2,769
.125	3,175
.188	4,775
.150	3,810
.250	6,350
.280	7,112
.300	7,620
.313	7,950
.500	12,700
.700	17,780
1.00	25,400
1.25	31,750
11.5	292,100

OBSOLETE

BOURNS

BOURNS, INC., TRIMPOT PRODUCTS DIVISION
1200 COLUMBIA AVENUE, RIVERSIDE, CALIFORNIA 92507

LITHO IN U.S.A.