- **Package Options Include Plastic "Small Outline" Packages, Ceramic Chip Carriers and Flat Packages, and Plastic and Ceramic DIPs**
- **Dependable Texas Instruments Quality and Reliability**

description

These devices contain three independent 3-input AND gates.

The SN54LS11 and SN54S11 are characterized for operation over the full military temperature range of −55°C to 125°C. The SN74LS11 and SN74S11 are characterized for operation from 0°C to 70°C.

FUNCTION TABLE (each gate)

INPUTS			OUTPUT
A	B	C	Y
H	H	H	H
L	X	X	L
X	L	X	L
X	X	L	L

logic symbol†

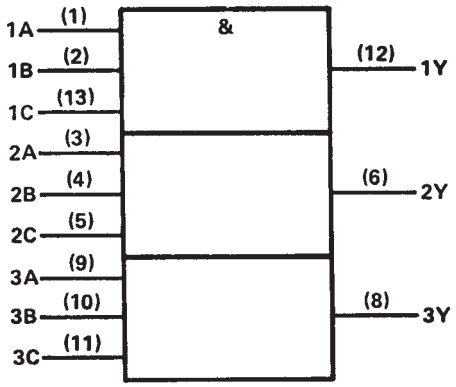

†This symbol is in accordance with ANSI/IEEE Std. 91-1984 and IEC Publication 617-12.
Pin numbers shown are for D, J, N, and W packages.

SN54LS11, SN74S11 . . . J OR W PACKAGE
SN74LS11, SN74S11 . . . D OR N PACKAGE
(TOP VIEW)

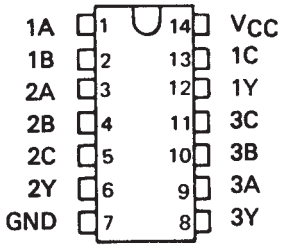

SN54LS11, SN54S11 . . . FK PACKAGE
(TOP VIEW)

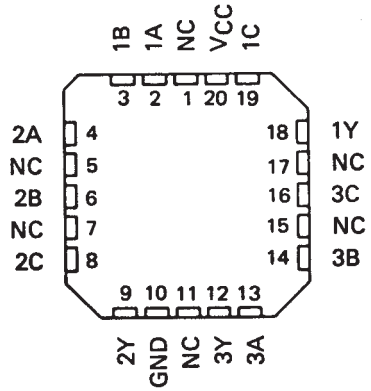

NC—No internal connection

logic diagram (positive logic)

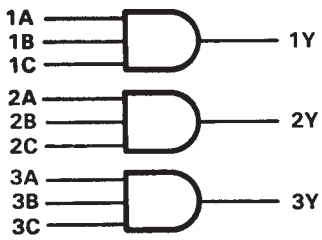

$Y = A \cdot B \cdot C$ or

$Y = \overline{\overline{A} + \overline{B} + \overline{C}}$

PRODUCTION DATA information is current as of publication date. Products conform to specifications per the terms of Texas Instruments standard warranty. Production processing does not necessarily include testing of all parameters.

Copyright © 1988, Texas Instruments Incorporated

schematics (each gate)

'LS11

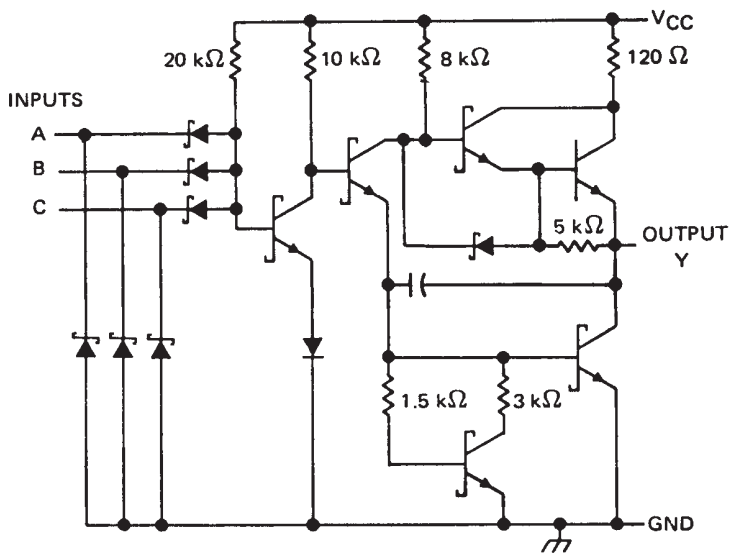

'S11

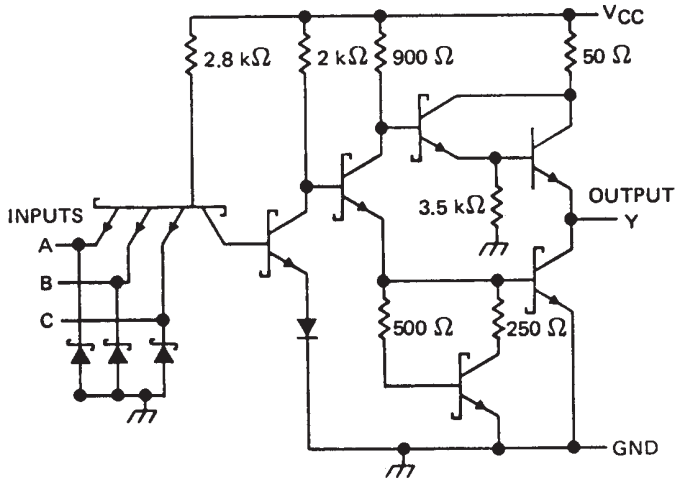

Resistor values shown are nominal.

absolute maximum ratings over operating free-air temperature range (unless otherwise noted)

Supply voltage, V_{CC} (see Note 1) . . . . . 7 V
Input voltage: 'S11 . . . . . 5.5 V
'LS11 . . . . . 7 V
Operating free-air temperature range: SN54' . . . . . −55°C to 125°C
SN74' . . . . . 0°C to 70°C
Storage temperature range . . . . . −65°C to 150°C

NOTE 1: Voltage values are with respect to network ground terminal.

recommended operating conditions

		SN54LS11			SN74LS11			UNIT
		MIN	NOM	MAX	MIN	NOM	MAX	
V_{CC}	Supply voltage	4.5	5	5.5	4.75	5	5.25	V
V_{IH}	High-level input voltage	2			2			V
V_{IL}	Low-level input voltage			0.7			0.8	V
I_{OH}	High-level output current			– 0.4			– 0.4	mA
I_{OL}	Low-level output current			4			8	mA
T_A	Operating free-air temperature	– 55		125	0		70	°C

electrical characteristics over recommended operating free-air temperature range (unless otherwise noted)

PARAMETER	TEST CONDITIONS †			SN54LS11			SN74LS11			UNIT
				MIN	TYP ‡	MAX	MIN	TYP ‡	MAX	
V_{IK}	V_{CC} = MIN,	I_I = – 18 mA				– 1.5			– 1.5	V
V_{OH}	V_{CC} = MIN,	V_{IH} = 2 V,	I_{OH} = – 0.4 mA	2.5	3.4		2.7	3.4		V
V_{OL}	V_{CC} = MIN,	V_{IL} = MAX,	I_{OL} = 4 mA		0.25	0.4		0.25	0.4	V
	V_{CC} = MIN,	V_{IL} = MAX,	I_{OL} = 8 mA					0.35	0.5	
I_I	V_{CC} = MAX,	V_I = 7 V				0.1			0.1	mA
I_{IH}	V_{CC} = MAX,	V_I = 2.7 V				20			20	μA
I_{IL}	V_{CC} = MAX,	V_I = 0.4 V				– 0.4			– 0.4	mA
I_{OS} §	V_{CC} = MAX			– 20		– 100	– 20		– 100	mA
I_{CCH}	V_{CC} = MAX,	V_I = 4.5 V			1.8	3.6		1.8	3.6	mA
I_{CCL}	V_{CC} = MAX,	V_I = 0 V			3.3	6.6		3.3	6.6	mA

† For conditions shown as MIN or MAX, use the appropriate value specified under recommended operating conditions.
‡ All typical values are at V_{CC} = 5 V, T_A = 25°C.
§ Not more than one output should be shorted at a time, and the duration of the short-circuit should not exceed one second.

switching characteristics, V_{CC} = 5 V, T_A = 25°C (see note 2)

PARAMETER	FROM (INPUT)	TO (OUTPUT)	TEST CONDITIONS		MIN	TYP	MAX	UNIT
t_{PLH}	A, B or C	Y	R_L = 2 kΩ,	C_L = 15 pF		8	15	ns
t_{PHL}						10	20	ns

NOTE 2: Load circuits and voltage waveforms are shown in Section 1.

recommended operating conditions

	SN54S11			SN74S11			UNIT
	MIN	NOM	MAX	MIN	NOM	MAX	
V_{CC} Supply voltage	4.5	5	5.5	4.75	5	5.25	V
V_{IH} High-level input voltage	2			2			V
V_{IL} Low-level input voltage			0.8			0.8	V
I_{OH} High-level output current			−1			−1	mA
I_{OL} Low-level output current			20			20	mA
T_A Operating free-air temperature	−55		125	0		70	°C

electrical characteristics over recommended operating free-air temperature range (unless otherwise noted)

PARAMETER	TEST CONDITIONS †	SN54S11			SN74S11			UNIT
		MIN	TYP ‡	MAX	MIN	TYP ‡	MAX	
V_{IK}	V_{CC} = MIN, I_I = −18 mA			−1.2			−1.2	V
V_{OH}	V_{CC} = MIN, V_{IH} = 2 V, I_{OH} = −1 mA	2.5	3.4		2.7	3.4		V
V_{OL}	V_{CC} = MIN, V_{IL} = 0.8 V, I_{OL} = 20 mA			0.5			0.5	V
I_I	V_{CC} = MAX, V_I = 5.5 V			1			1	mA
I_{IH}	V_{CC} = MAX, V_I = 2.7 V			50			50	μA
I_{IL}	V_{CC} = MAX, V_I = 0.5 V			−2			−2	mA
I_{OS} §	V_{CC} = MAX	−40		−100	−40		−100	mA
I_{CCH}	V_{CC} = MAX, V_I = 4.5 V		13.5	24		13.5	24	mA
I_{CCL}	V_{CC} = MAX, V_I = 0 V		24	42		24	42	mA

† For conditions shown as MIN or MAX, use the appropriate value specified under recommended operating conditions.
‡ All typical values are at V_{CC} = 5 V, T_A = 25°C.
§ Not more than one output should be shorted at a time, and the duration of the short-circuit should not exceed one second.

switching characteristics, V_{CC} = 5 V, T_A = 25°C (see note 2)

PARAMETER	FROM (INPUT)	TO (OUTPUT)	TEST CONDITIONS	MIN	TYP	MAX	UNIT
t_{PLH}	A, B or C	Y	R_L = 280 Ω, C_L = 15 pF		4.5	7	ns
t_{PHL}					5	7.5	ns
t_{PLH}			R_L = 280 Ω, C_L = 50 pF		6		ns
t_{PHL}					7.5		ns

NOTE 2: Load circuits and voltage waveforms are shown in Section 1.