MOTOROLA

# QUAD SET-RESET LATCH

## SN54/74LS279

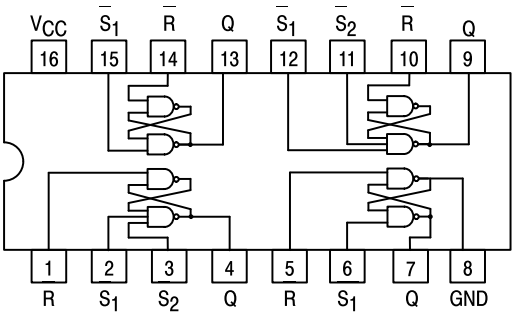


**QUAD SET-RESET LATCH**

**LOW POWER SCHOTTKY**

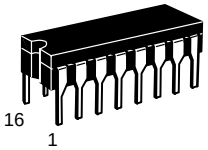


**J SUFFIX**
CERAMIC
CASE 620-09

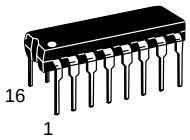


**N SUFFIX**
PLASTIC
CASE 648-08

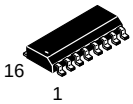


**D SUFFIX**
SOIC
CASE 751B-03

### TRUTH TABLE

| INPUT | | | OUTPUT (Q) |
|---|---|---|---|
| $\overline{S_1}$ | $\overline{S_2}$ | $\overline{R}$ | |
| L | L | L | h |
| L | X | H | H |
| X | L | H | H |
| H | H | L | L |
| H | H | H | No Change |

L = LOW Voltage Level
H = HIGH Voltage Level
X = Don't Care
h = The output is HIGH as long as $S_1$ or $S_2$ is LOW. If all inputs go HIGH simultaneously, the output state is indeterminate; otherwise, it follows the Truth Table

### ORDERING INFORMATION

| | |
|---|---|
| SN54LSXXXJ | Ceramic |
| SN74LSXXXN | Plastic |
| SN74LSXXXD | SOIC |

### GUARANTEED OPERATING RANGES

| Symbol | Parameter | | Min | Typ | Max | Unit |
|---|---|---|---|---|---|---|
| $V_{CC}$ | Supply Voltage | 54<br>74 | 4.5<br>4.75 | 5.0<br>5.0 | 5.5<br>5.25 | V |
| $T_A$ | Operating Ambient Temperature Range | 54<br>74 | –55<br>0 | 25<br>25 | 125<br>70 | °C |
| $I_{OH}$ | Output Current — High | 54, 74 | | | –0.4 | mA |
| $I_{OL}$ | Output Current — Low | 54<br>74 | | | 4.0<br>8.0 | mA |

**DC CHARACTERISTICS OVER OPERATING TEMPERATURE RANGE** (unless otherwise specified)

| Symbol | Parameter | | Limits Min | Limits Typ | Limits Max | Unit | Test Conditions | |
|---|---|---|---|---|---|---|---|---|
| $V_{IH}$ | Input HIGH Voltage | | 2.0 | | | V | Guaranteed Input HIGH Voltage for All Inputs | |
| $V_{IL}$ | Input LOW Voltage | 54 | | | 0.7 | V | Guaranteed Input LOW Voltage for All Inputs | |
| | | 74 | | | 0.8 | | | |
| $V_{IK}$ | Input Clamp Diode Voltage | | | –0.65 | –1.5 | V | $V_{CC}$ = MIN, $I_{IN}$ = –18 mA | |
| $V_{OH}$ | Output HIGH Voltage | 54 | 2.5 | 3.5 | | V | $V_{CC}$ = MIN, $I_{OH}$ = MAX, $V_{IN}$ = $V_{IH}$ or $V_{IL}$ per Truth Table | |
| | | 74 | 2.7 | 3.5 | | V | | |
| $V_{OL}$ | Output LOW Voltage | 54, 74 | | 0.25 | 0.4 | V | $I_{OL}$ = 4.0 mA | $V_{CC}$ = $V_{CC}$ MIN, $V_{IN}$ = $V_{IL}$ or $V_{IH}$ per Truth Table |
| | | 74 | | 0.35 | 0.5 | V | $I_{OL}$ = 8.0 mA | |
| $I_{IH}$ | Input HIGH Current | | | | 20 | μA | $V_{CC}$ = MAX, $V_{IN}$ = 2.7 V | |
| | | | | | 0.1 | mA | $V_{CC}$ = MAX, $V_{IN}$ = 7.0 V | |
| $I_{IL}$ | Input LOW Current | | | | –0.4 | mA | $V_{CC}$ = MAX, $V_{IN}$ = 0.4 V | |
| $I_{OS}$ | Short Circuit Current (Note 1) | | –20 | | –100 | mA | $V_{CC}$ = MAX | |
| $I_{CC}$ | Power Supply Current | | | | 7.0 | mA | $V_{CC}$ = MAX | |

Note 1: Not more than one output should be shorted at a time, nor for more than 1 second.

**AC CHARACTERISTICS** ($T_A$ = 25°C)

| Symbol | Parameter | Limits Min | Limits Typ | Limits Max | Unit | Test Conditions |
|---|---|---|---|---|---|---|
| $t_{PLH}$<br>$t_{PHL}$ | Propagation Delay, $\overline{S}$ to Output | | | 22<br>21* | ns | $V_{CC}$ = 5.0 V<br>$C_L$ = 15 pF |
| $t_{PHL}$ | Propagation Delay, $\overline{R}$ to Output | | | 27 | ns | |

* Add 0.6 ns to spec limit for each 1.0 ns input rise time less than 15 ns.

## Case 751B-03 D Suffix
## 16-Pin Plastic
## SO-16

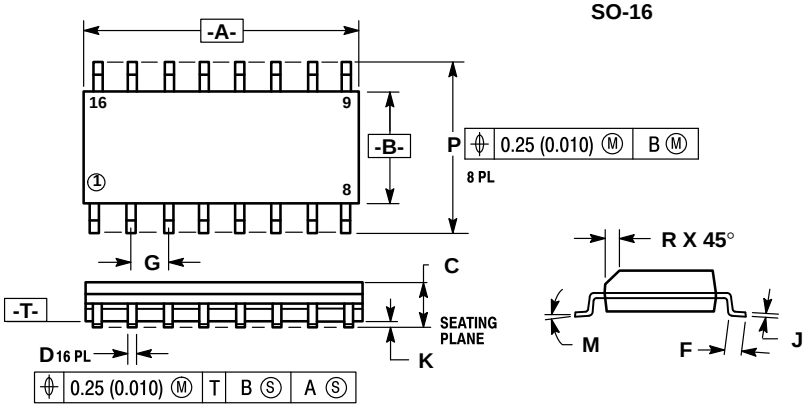


NOTES:
1. DIMENSIONING AND TOLERANCING PER ANSI Y14.5M, 1982.
2. CONTROLLING DIMENSION: MILLIMETER.
3. DIMENSION A AND B DO NOT INCLUDE MOLD PROTRUSION.
4. MAXIMUM MOLD PROTRUSION 0.15 (0.006) PER SIDE.
5. 751B-01 IS OBSOLETE, NEW STANDARD 751B-03.

| | MILLIMETERS | | INCHES | |
|---|---|---|---|---|
| DIM | MIN | MAX | MIN | MAX |
| A | 9.80 | 10.00 | 0.386 | 0.393 |
| B | 3.80 | 4.00 | 0.150 | 0.157 |
| C | 1.35 | 1.75 | 0.054 | 0.068 |
| D | 0.35 | 0.49 | 0.014 | 0.019 |
| F | 0.40 | 1.25 | 0.016 | 0.049 |
| G | 1.27 BSC | | 0.050 BSC | |
| J | 0.19 | 0.25 | 0.008 | 0.009 |
| K | 0.10 | 0.25 | 0.004 | 0.009 |
| M | 0° | 7° | 0° | 7° |
| P | 5.80 | 6.20 | 0.229 | 0.244 |
| R | 0.25 | 0.50 | 0.010 | 0.019 |

## Case 648-08 N Suffix
## 16-Pin Plastic

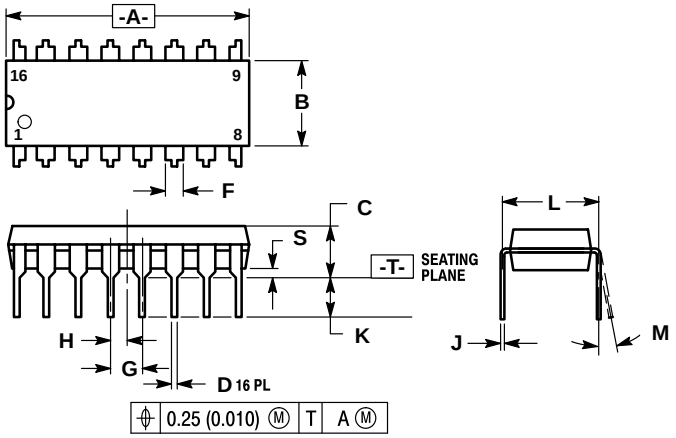


NOTES:
1. DIMENSIONING AND TOLERANCING PER ANSI Y14.5M, 1982.
2. CONTROLLING DIMENSION: INCH.
3. DIMENSION "L" TO CENTER OF LEADS WHEN FORMED PARALLEL.
4. DIMENSION "B" DOES NOT INCLUDE MOLD FLASH.
5. ROUNDED CORNERS OPTIONAL.
6. 648-01 THRU -07 OBSOLETE, NEW STANDARD 648-08.

| | MILLIMETERS | | INCHES | |
|---|---|---|---|---|
| DIM | MIN | MAX | MIN | MAX |
| A | 18.80 | 19.55 | 0.740 | 0.770 |
| B | 6.35 | 6.85 | 0.250 | 0.270 |
| C | 3.69 | 4.44 | 0.145 | 0.175 |
| D | 0.39 | 0.53 | 0.015 | 0.021 |
| F | 1.02 | 1.77 | 0.040 | 0.070 |
| G | 2.54 BSC | | 0.100 BSC | |
| H | 1.27 BSC | | 0.050 BSC | |
| J | 0.21 | 0.38 | 0.008 | 0.015 |
| K | 2.80 | 3.30 | 0.110 | 0.130 |
| L | 7.50 | 7.74 | 0.295 | 0.305 |
| M | 0° | 10° | 0° | 10° |
| S | 0.51 | 1.01 | 0.020 | 0.040 |

## Case 620-09 J Suffix
## 16-Pin Ceramic Dual In-Line

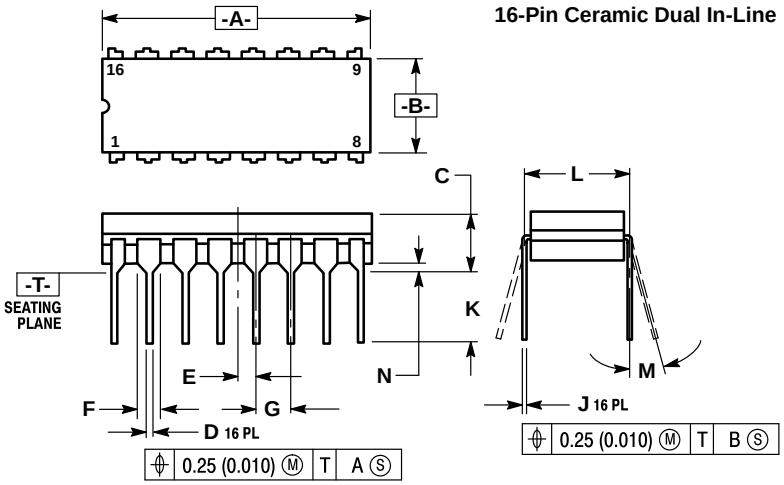


NOTES:
1. DIMENSIONING AND TOLERANCING PER ANSI Y14.5M, 1982.
2. CONTROLLING DIMENSION: INCH.
3. DIMENSION L TO CENTER OF LEAD WHEN FORMED PARALLEL.
4. DIM F MAY NARROW TO 0.76 (0.030) WHERE THE LEAD ENTERS THE CERAMIC BODY.
5. 620-01 THRU -08 OBSOLETE, NEW STANDARD 620-09.

| | MILLIMETERS | | INCHES | |
|---|---|---|---|---|
| DIM | MIN | MAX | MIN | MAX |
| A | 19.05 | 19.55 | 0.750 | 0.770 |
| B | 6.10 | 7.36 | 0.240 | 0.290 |
| C | — | 4.19 | — | 0.165 |
| D | 0.39 | 0.53 | 0.015 | 0.021 |
| E | 1.27 BSC | | 0.050 BSC | |
| F | 1.40 | 1.77 | 0.055 | 0.070 |
| G | 2.54 BSC | | 0.100 BSC | |
| J | 0.23 | 0.27 | 0.009 | 0.011 |
| K | — | 5.08 | — | 0.200 |
| L | 7.62 BSC | | 0.300 BSC | |
| M | 0° | 15° | 0° | 15° |
| N | 0.39 | 0.88 | 0.015 | 0.035 |

Motorola reserves the right to make changes without further notice to any products herein. Motorola makes no warranty, representation or guarantee regarding the suitability of its products for any particular purpose, nor does Motorola assume any liability arising out of the application or use of any product or circuit, and specifically disclaims any and all liability, including without limitation consequential or incidental damages. “Typical” parameters can and do vary in different applications. All operating parameters, including “Typicals” must be validated for each customer application by customer’s technical experts. Motorola does not convey any license under its patent rights nor the rights of others. Motorola products are not designed, intended, or authorized for use as components in systems intended for surgical implant into the body, or other applications intended to support or sustain life, or for any other application in which the failure of the Motorola product could create a situation where personal injury or death may occur. Should Buyer purchase or use Motorola products for any such unintended or unauthorized application, Buyer shall indemnify and hold Motorola and its officers, employees, subsidiaries, affiliates, and distributors harmless against all claims, costs, damages, and expenses, and reasonable attorney fees arising out of, directly or indirectly, any claim of personal injury or death associated with such unintended or unauthorized use, even if such claim alleges that Motorola was negligent regarding the design or manufacture of the part. Motorola and ⓜ are registered trademarks of Motorola, Inc. Motorola, Inc. is an Equal Opportunity/Affirmative Action Employer.

**Literature Distribution Centers:**
USA: Motorola Literature Distribution; P.O. Box 20912; Phoenix, Arizona 85036.
EUROPE: Motorola Ltd.; European Literature Centre; 88 Tanners Drive, Blakelands, Milton Keynes, MK14 5BP, England.
JAPAN: Nippon Motorola Ltd.; 4-32-1, Nishi-Gotanda, Shinagawa-ku, Tokyo 141, Japan.
ASIA PACIFIC: Motorola Semiconductors H.K. Ltd.; Silicon Harbour Center, No. 2 Dai King Street, Tai Po Industrial Estate, Tai Po, N.T., Hong Kong.