DATA SHEET

For a complete data sheet, please also download:

- The IC04 LOCMOS HE4000B Logic Family Specifications HEF, HEC
- The IC04 LOCMOS HE4000B Logic Package Outlines/Information HEF, HEC

HEF4017B
MSI
5-stage Johnson counter

Product specification
File under Integrated Circuits, IC04

January 1995

Philips Semiconductors

PHILIPS

5-stage Johnson counter

HEF4017B
MSI

DESCRIPTION

The HEF4017B is a 5-stage Johnson decade counter with ten spike-free decoded active HIGH outputs (O_0 to O_9), an active LOW output from the most significant flip-flop ($\overline{O}_{5\text{-}9}$), active HIGH and active LOW clock inputs (CP_0, $\overline{CP}_1$) and an overriding asynchronous master reset input (MR).

The counter is advanced by either a LOW to HIGH transition at CP_0 while $\overline{CP}_1$ is LOW or a HIGH to LOW transition at $\overline{CP}_1$ while CP_0 is HIGH (see also function table).

When cascading counters, the $\overline{O}_{5\text{-}9}$ output, which is LOW while the counter is in states 5, 6, 7, 8 and 9, can be used to drive the CP_0 input of the next counter.

A HIGH on MR resets the counter to zero ($O_0 = \overline{O}_{5\text{-}9}$ = HIGH; O_1 to O_9 = LOW) independent of the clock inputs (CP_0, $\overline{CP}_1$).

Automatic code correction of the counter is provided by an internal circuit: following any illegal code the counter returns to a proper counting mode within 11 clock pulses.

Schmitt-trigger action in the clock input makes the circuit highly tolerant to slower clock rise and fall times.

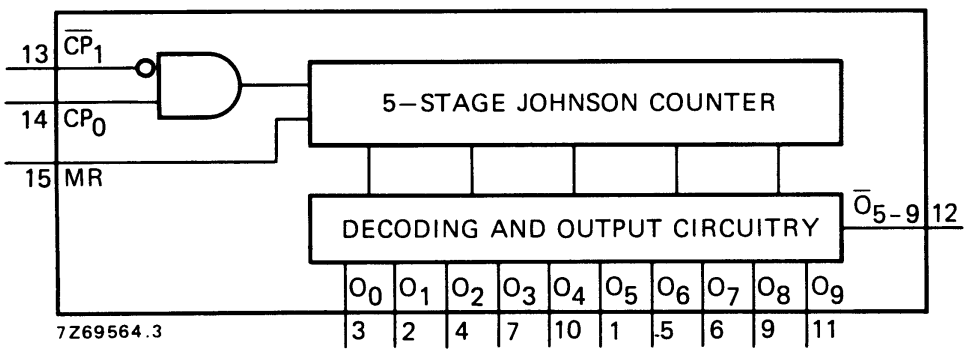

Fig.1 Functional diagram.

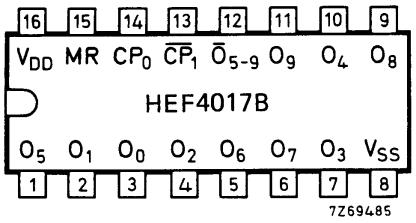

Fig.2 Pinning diagram.

PINNING

CP_0	clock input (LOW to HIGH triggered)
$\overline{CP}_1$	clock input (HIGH to LOW triggered)
MR	master reset input
O_0 to O_9	decoded outputs
$\overline{O}_{5\text{-}9}$	carry output (active LOW)

FAMILY DATA, I_{DD} LIMITS category MSI

See Family Specifications

HEF4017BP(N): 16-lead DIL; plastic (SOT38-1)
HEF4017BD(F): 16-lead DIL; ceramic (cerdip) (SOT74)
HEF4017BT(D): 16-lead SO; plastic (SOT109-1)
( ): Package Designator North America

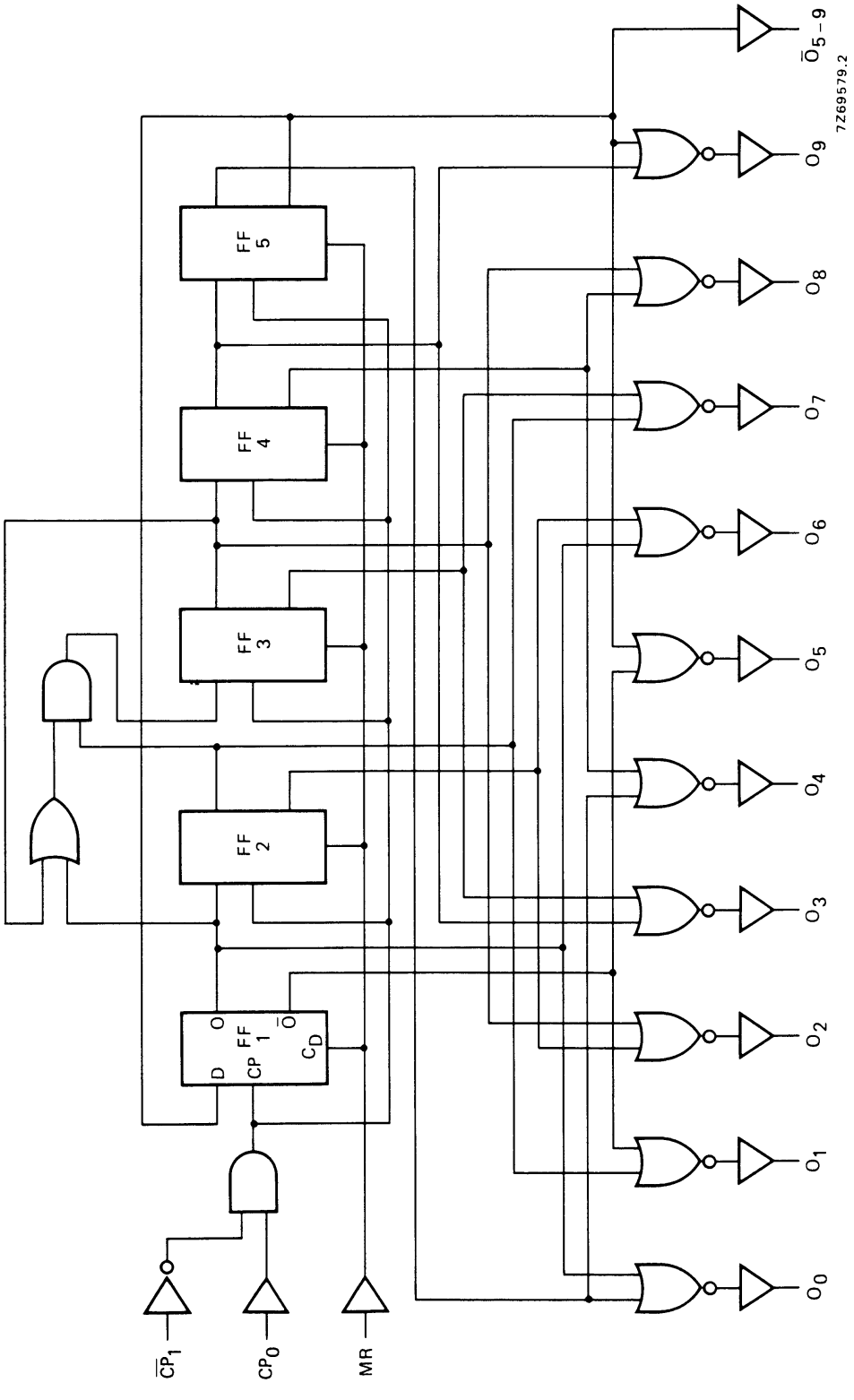

Fig.3 Logic diagram.

FUNCTION TABLE

MR	CP_0	$\overline{CP}_1$	OPERATION
H	X	X	$O_0 = \overline{O}_{5\text{-}9}$ = H; O_1 to O_9 = L
L	H	↓	Counter advances
L	↑	L	Counter advances
L	L	X	No change
L	X	H	No change
L	H	↑	No change
L	↓	L	No change

Notes

1. H = HIGH state (the more positive voltage)
2. L = LOW state (the less positive voltage)
3. X = state is immaterial
4. ↑ = positive-going transition
5. ↓ = negative-going transition

AC CHARACTERISTICS

V_{SS} = 0 V; T_{amb} = 25 °C; C_L = 50 pF; input transition times ≤ 20 ns

	V_{DD} V	SYMBOL	MIN.	TYP.	MAX.		TYPICAL EXTRAPOLATION FORMULA
Propagation delays							
CP_0, $\overline{CP}_1 \rightarrow O_0$ to O_9	5			140	280	ns	113 ns + (0,55 ns/pF) C_L
HIGH to LOW	10	t_{PHL}		55	110	ns	44 ns + (0,23 ns/pF) C_L
	15			40	80	ns	32 ns + (0,16 ns/pF) C_L
	5			125	250	ns	98 ns + (0,55 ns/pF) C_L
LOW to HIGH	10	t_{PLH}		50	100	ns	39 ns + (0,23 ns/pF) C_L
	15			40	80	ns	32 ns + (0,16 ns/pF) C_L
CP_0, $\overline{CP}_1 \rightarrow \overline{O}_{5\text{-}9}$	5			145	290	ns	118 ns + (0,55 ns/pF) C_L
HIGH to LOW	10	t_{PHL}		55	110	ns	44 ns + (0,23 ns/pF) C_L
	15			40	80	ns	32 ns + (0,16 ns/pF) C_L
	5			125	250	ns	98 ns + (0,55 ns/pF) C_L
LOW to HIGH	10	t_{PLH}		50	100	ns	39 ns + (0,23 ns/pF) C_L
	15			40	80	ns	32 ns + (0,16 ns/pF) C_L
MR $\rightarrow O_1$ to O_9	5			115	230	ns	88 ns + (0,55 ns/pF) C_L
HIGH to LOW	10	t_{PHL}		50	100	ns	39 ns + (0,23 ns/pF) C_L
	15			35	70	ns	27 ns + (0,16 ns/pF) C_L
MR $\rightarrow \overline{O}_{5\text{-}9}$	5			110	220	ns	83 ns + (0,55 ns/pF) C_L
LOW to HIGH	10	t_{PLH}		45	90	ns	34 ns + (0,23 ns/pF) C_L
	15			35	70	ns	27 ns + (0,16 ns/pF) C_L
MR $\rightarrow O_0$	5			130	260	ns	103 ns + (0,55 ns/pF) C_L
LOW to HIGH	10	t_{PLH}		55	105	ns	44 ns + (0,23 ns/pF) C_L
	15			40	75	ns	32 ns + (0,16 ns/pF) C_L

	V_{DD} V	SYMBOL	MIN.	TYP.	MAX.		TYPICAL EXTRAPOLATION FORMULA
Output transition							
times	5			60	120	ns	10 ns + (1,0 ns/pF) C_L
HIGH to LOW	10	t_{THL}		30	60	ns	9 ns + (0,42 ns/pF) C_L
	15			20	40	ns	6 ns + (0,28 ns/pF) C_L
	5			60	120	ns	10 ns + (1,0 ns/pF) C_L
LOW to HIGH	10	t_{TLH}		30	60	ns	9 ns + (0,42 ns/pF) C_L
	15			20	40	ns	6 ns + (0,28 ns/pF) C_L

AC CHARACTERISTICS

V_{SS} = 0 V; T_{amb} = 25 °C; C_L = 50 pF; input transition times ≤ 20 ns

	V_{DD} V	SYMBOL	MIN.	TYP.	MAX.		
Hold times	5		90	45		ns	
$CP_0 \rightarrow \overline{CP}_1$	10	t_{hold}	40	20		ns	
	15		20	10		ns	
	5		80	40		ns	
$\overline{CP}_1 \rightarrow CP_0$	10	t_{hold}	40	20		ns	
	15		30	10		ns	
Minimum clock							
pulse width:	5		80	40		ns	
CP_0 = LOW;	10	t_{WCPL} = t_{WCPH}	40	20		ns	see also waveforms
$\overline{CP}_1$ = HIGH	15		30	15		ns	Figs 4 and 5
Minimum MR	5		50	25		ns	
pulse width; HIGH	10	t_{WMRH}	30	15		ns	
	15		20	10		ns	
Recovery time	5		60	30		ns	
for MR	10	t_{RMR}	30	15		ns	
	15		20	10		ns	
Maximum clock	5		6	12		MHz	
pulse frequency	10	f_{max}	12	24		MHz	
	15		15	30		MHz	

	V_{DD} V	TYPICAL FORMULA FOR P (μW)	
Dynamic power	5	$500\ f_i + \sum (f_o C_L) \times V_{DD}^2$	where
dissipation per	10	$2200\ f_i + \sum (f_o C_L) \times V_{DD}^2$	f_i = input freq. (MHz)
package (P)	15	$6000\ f_i + \sum (f_o C_L) \times V_{DD}^2$	f_o = output freq. (MHz)
			C_L = load cap. (pF)
			$\sum (f_o C_L)$ = sum of outputs
			V_{DD} = supply voltage (V)

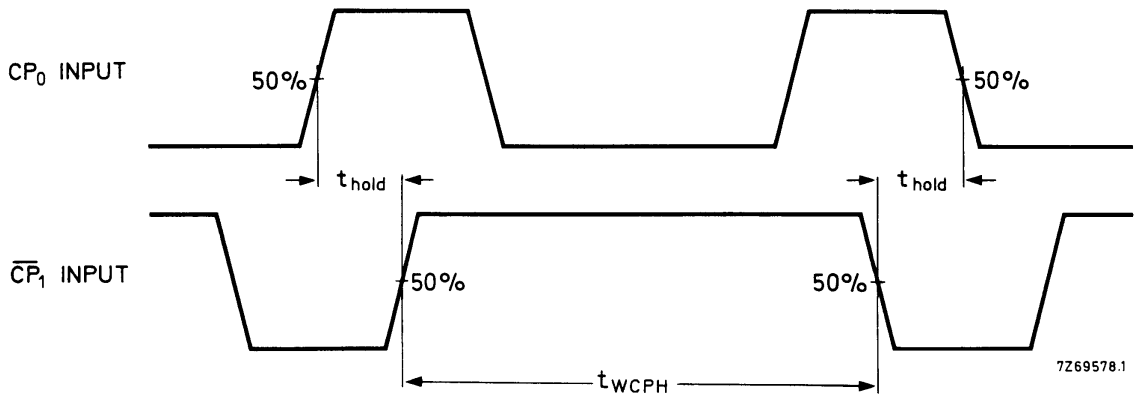

Fig.4 Waveforms showing hold times for CP_0 to $\overline{CP}_1$ and $\overline{CP}_1$ to CP_0. Hold times are shown as positive values, but may be specified as negative values.

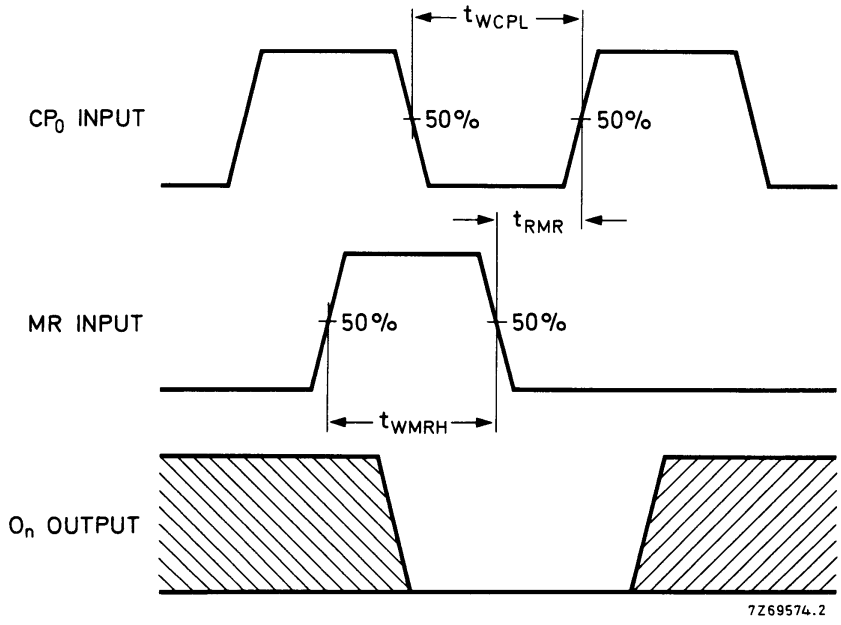

Conditions: $\overline{CP}_1$ = LOW while CP_0 is triggered on a LOW to HIGH transition. t_{WCP} and t_{RMR} also apply when CP_0 = HIGH and $\overline{CP}_1$ is triggered on a HIGH to LOW transition.

Fig.5 Waveforms showing recovery time for MR; minimum CP_0 and MR pulse widths.

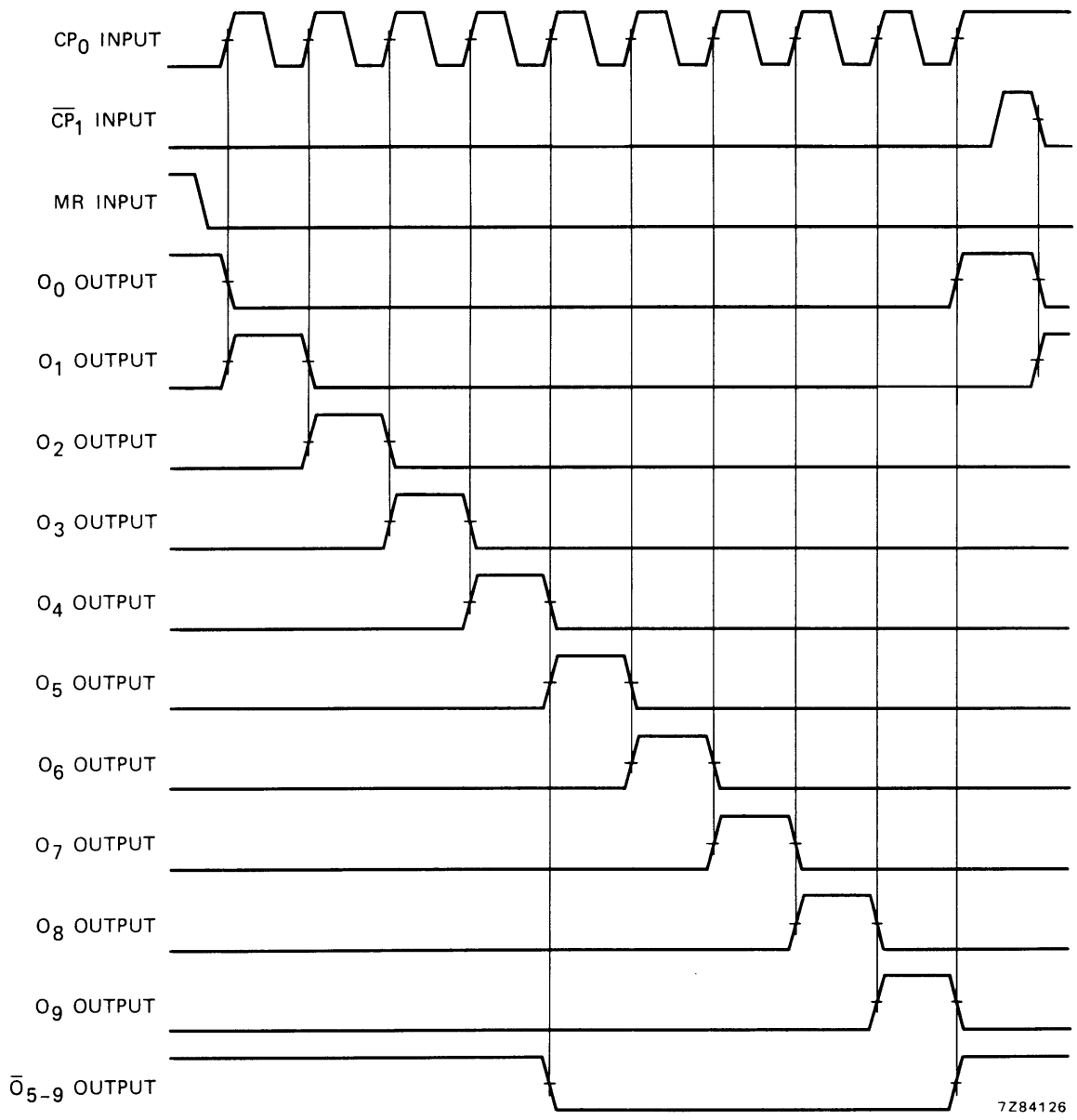

Fig.6 Timing diagram.

APPLICATION INFORMATION

Some examples of applications for the HEF4017B are:

- Decade counter with decimal decoding
- 1 out of n decoding counter (when cascaded)
- Sequential controller
- Timer.

Figure 7 shows a technique for extending the number of decoded output states for the HEF4017B. Decoded outputs are sequential within each stage and from stage to stage, with no dead time (except propagation delay).

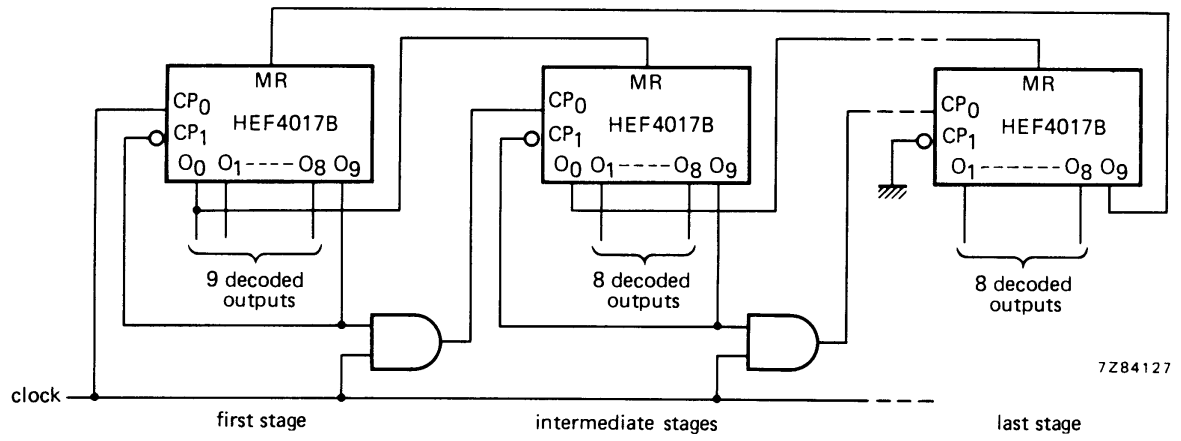

Fig.7 Counter expansion.

Note

It is essential not to enable the counter on $\overline{CP}_1$ when CP_0 is HIGH, or on CP_0 when $\overline{CP}_1$ is LOW, as the this would cause an extra count.