Silicon NPN Darlington Power Transistors TIP120/121/122

DESCRIPTION

·With TO-220C package
·DARLINGTON
·High DC current gain
·Low collector saturation voltage
·Complement to type TIP125/126/127

APPLICATIONS

·Designed for general–purpose amplifier and low–speed switching applications.

PINNING

PIN	DESCRIPTION
1	Base
2	Collector;connected to mounting base
3	Emitter

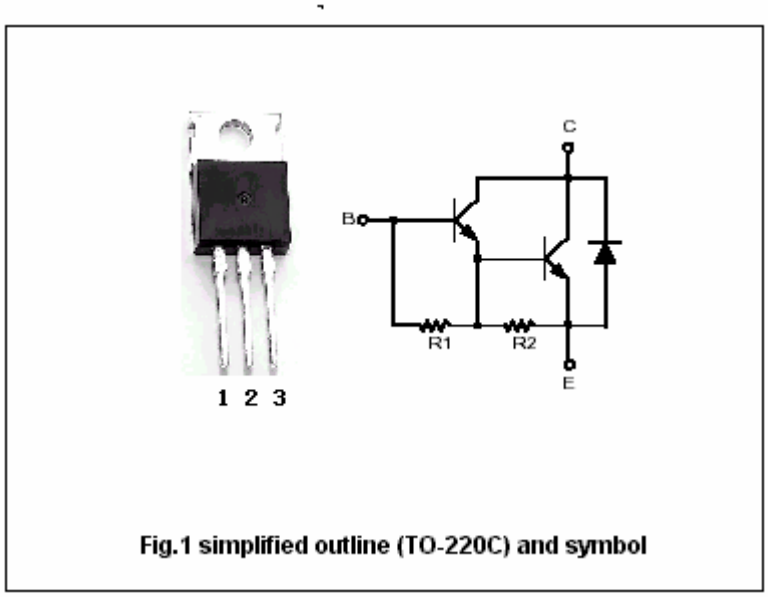

Fig.1 simplified outline (TO-220C) and symbol

ABSOLUTE MAXIMUM RATINGS (Tc=25□)

SYMBOL	PARAMETER		CONDITIONS	VALUE	UNIT
V_{CBO}	Collector-base voltage	TIP120	Open emitter	60	V
		TIP121		80	
		TIP122		100	
V_{CEO}	Collector-emitter voltage	TIP120	Open base	60	V
		TIP121		80	
		TIP122		100	
V_{EBO}	Emitter-base voltage		Open collector	5	V
I_C	Collector current-DC			5	A
I_{CM}	Collector current-Pulse			8	A
I_B	Base current-DC			120	mA
P_C	Collector power dissipation		T_C=25□	65	W
			T_a=25□	2	
T_j	Junction temperature			150	□
T_{stg}	Storage temperature			-65~150	□

Silicon NPN Darlington Power Transistors TIP120/121/122

CHARACTERISTICS

Tj=25□ unless otherwise specified

SYMBOL	PARAMETER		CONDITIONS	MIN	TYP.	MAX	UNIT
$V_{CEO(SUS)}$	Collector-emitter sustaining voltage	TIP120	I_C=0.1A, I_B=0	60			V
		TIP121		80			
		TIP122		100			
$V_{CE(sat)-1}$	Collector-emitter saturation voltage		I_C=3A ,I_B=12mA			2.0	V
$V_{CE(sat)-2}$	Collector-emitter saturation voltage		I_C=5A ,I_B=20mA			4.0	V
V_{BE}	Base-emitter on voltage		I_C=3.0A ; V_{CE}=3V			2.5	V
I_{CBO}	Collector cut-off current	TIP120	V_{CB}=60V, I_E=0			0.2	mA
		TIP121	V_{CB}=80V, I_E=0				
		TIP122	V_{CB}=100V, I_E=0				
I_{CEO}	Collector cut-off current	TIP120	V_{CE}=30V, I_B=0			0.5	mA
		TIP121	V_{CE}=40V, I_B=0				
		TIP122	V_{CE}=50V, I_B=0				
I_{EBO}	Emitter cut-off current		V_{EB}=5V; I_C=0			2	mA
h_{FE-1}	DC current gain		I_C=0.5A ; V_{CE}=3V	1000			
h_{FE-2}	DC current gain		I_C=3.0A ; V_{CE}=3V	1000			
C_{ob}	Output capacitance		I_E=0 ; V_{CB}=10V,f=0.1MHz			200	pF

PACKAGE OUTLINE

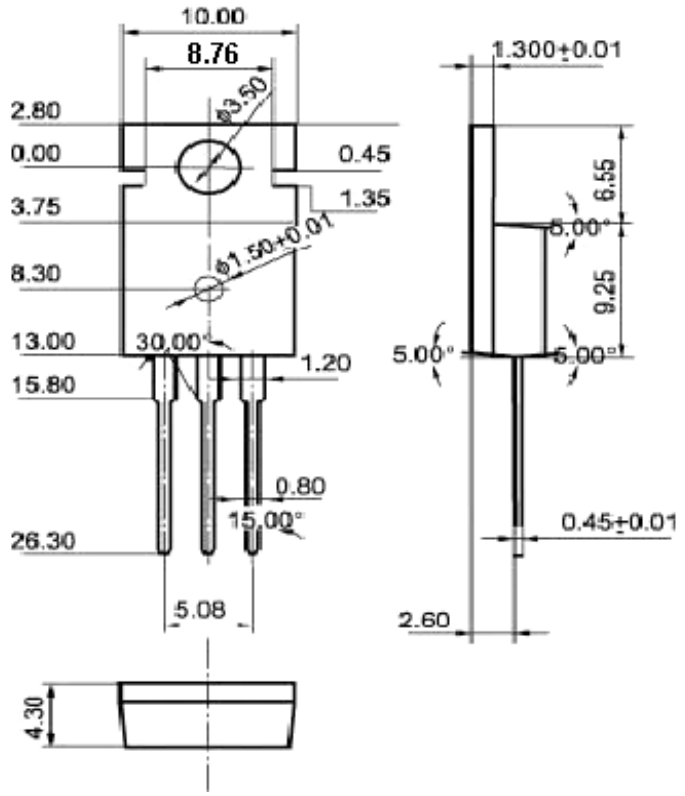

Fig.2 Outline dimensions (unindicated tolerance:±0.10 mm)

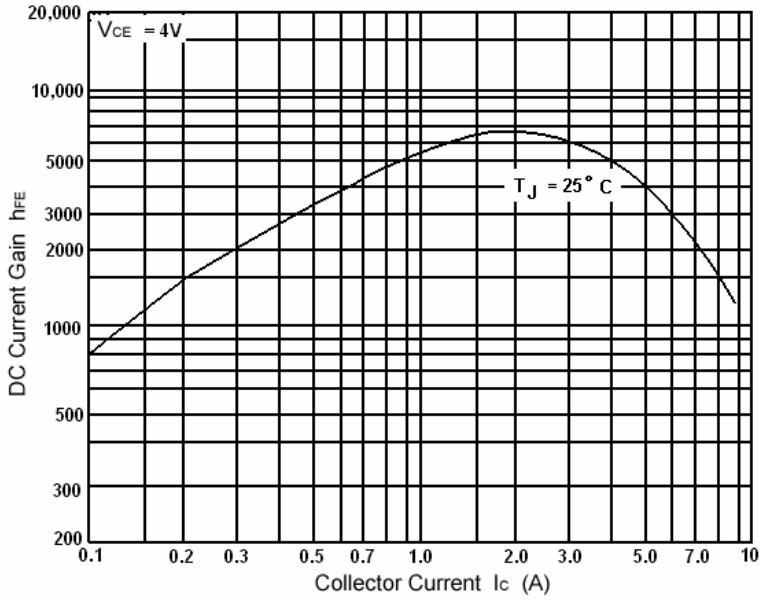

Fig.3 DC current Gain

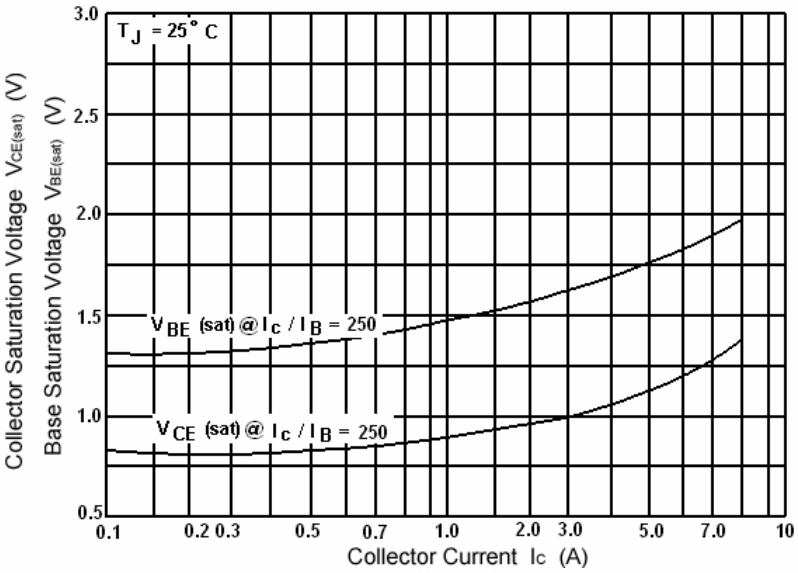

Fig.4 Base-Emitter Saturation Voltage
Collector-Emitter Saturation Voltage

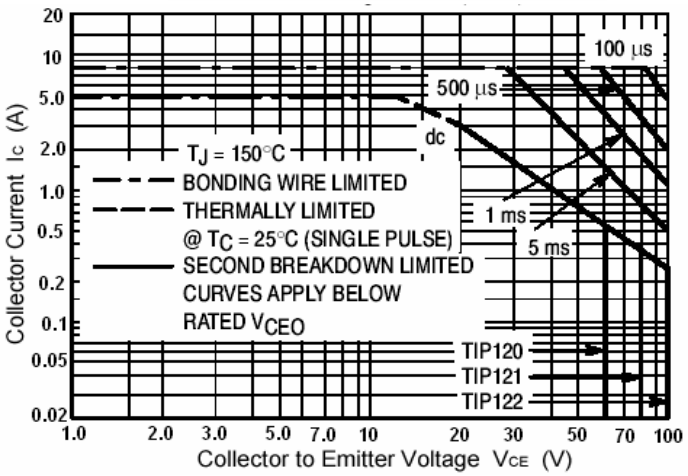

Fig.5 Safe Operating Area