SN5423, SN5425, SN7423, SN7425
DUAL 4-INPUT NOR GATES WITH STROBE

SDLS082

DECEMBER 1983—REVISED MARCH 1988

- **Package Options Include Plastic and Ceramic DIPs and Ceramic Flat Packages**
- **Dependable Texas Instruments Quality and Reliability**

description

These devices contain dual 4-input positive NOR gates with strobe. They perform the Boolean function:

$$Y = \overline{G(A+B+C+D)}$$

(with 1X and $1\overline{X}$ of '23 left open).

The SN5423 and the SN5425 are characterized for operation over the full military temperature range of −55°C to 125°C. The SN7423 and the SN7425 are characterized for operation from 0°C to 70°C.

FUNCTION TABLE

INPUTS					OUTPUT
A	B	C	D	G	Y
H	X	X	X	H	L
X	H	X	X	H	L
X	X	H	X	H	L
X	X	X	H	H	L
L	L	L	L	X	H
X	X	X	X	L	H

Expander inputs are open.
H = high level, L = low level, X = irrelevant

SN5423 . . . J OR W PACKAGE
SN7423 . . . N PACKAGE
(TOP VIEW)

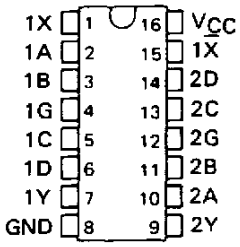

SN5425 . . . J OR W PACKAGE
SN7425 . . . N PACKAGE
(TOP VIEW)

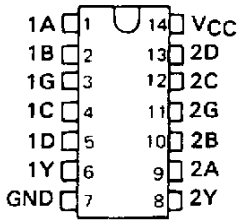

logic diagram

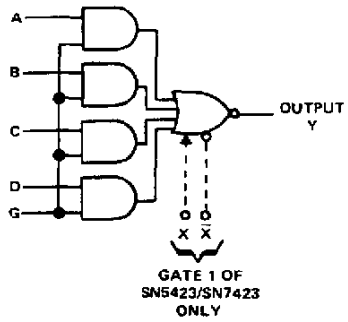

logic symbols†

SN5423/SN7423

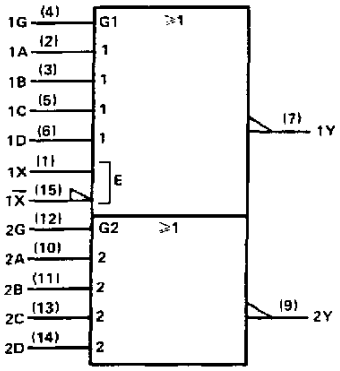

SN5425/SN7425

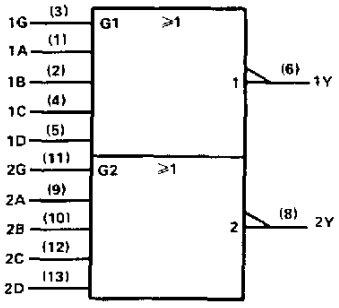

†These symbols are in accordance with ANSI/IEEE Std. 91-1984 and IEC Publication 617-12.
Pin numbers are for J, N, or W packages.

PRODUCTION DATA documents contain information current as of publication date. Products conform to specifications per the terms of Texas Instruments standard warranty. Production processing does not necessarily include testing of all parameters.

schematic (each gate)

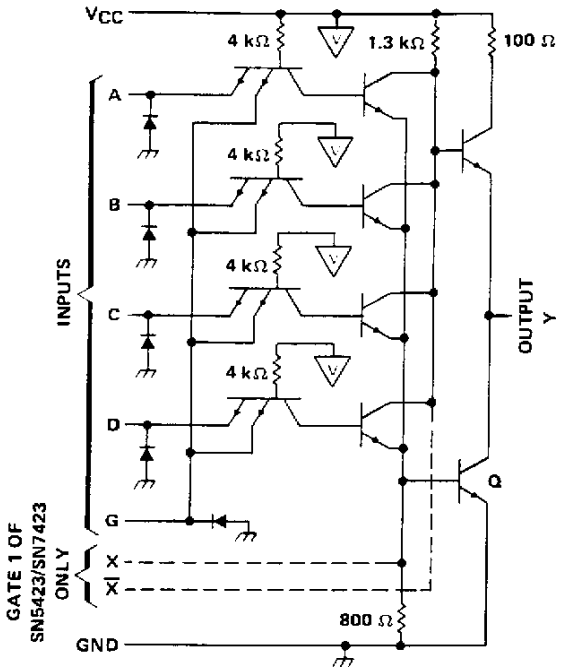

NOTES: A. Component values shown are nominal.
B. Both expander inputs are used simultaneously for expanding.
C. If expander is not used leave X and X open.
D. A total of four expander gates can be connected to the expander inputs.
▽ – V_{CC} bus

absolute maximum ratings over operating free-air temperature range (unless otherwise noted)

Supply voltage V_{CC} (see Note 1) . . . . . 7 V
Input voltage (see Note 1) . . . . . 5.5 V
Interemitter voltage (see Note 2) . . . . . 5.5 V
Operating free-air temperature range: SN5423, SN5425 Circuits . . . . . −55°C to 125°C
SN7423, SN7425 Circuits . . . . . 0°C to 70°C
Storage temperature range . . . . . −65°C to 150°C

NOTES: 1. Voltage values, except interemitter voltage, are with respect to network ground terminal.
2. This is the voltage between two emitters of a multiple-emitter transistor.

recommended operating conditions

			'23, '25			UNIT
			MIN	NOM	MAX	
V_{CC}	Supply voltage	54 Family	4.5	5	5.5	V
		74 Family	4.75	5	5.25	
V_{IH}	High-level input voltage		2			V
V_{IL}	Low-level input voltage				0.8	V
I_{OH}	High-level output current				−0.8	mA
I_{OL}	Low-level output current	54 Family			16	mA
		74 Family			16	
T_A	Operating free-air temperature range	54 Family	−55		125	°C
		74 Family	0		70	

The '23 is designed for use with up to four '60 expanders.

electrical characteristics over recommended operating free-air temperature range (unless otherwise noted)

PARAMETER		TEST CONDITIONS†			MIN	TYP‡	MAX	UNIT
V_I		V_{CC} = MIN, I_I = – 12 mA					– 1.5	V
V_{OH}		V_{CC} = MIN, V_{IL} = 0.8 V, I_{OH} = – 0.8 mA			2.4	3.4		V
V_{OL}		V_{CC} = MIN, V_{IH} = 2 V, I_{OL} = 16 mA				0.2	0.4	V
I_I		V_{CC} = MAX, V_I = 5.5 V					1	mA
I_{IH}	data inputs	V_{CC} = MAX, V_I = 2.4 V					40	μA
	strobe inputs						160	
I_{IL}	data inputs	V_{CC} = MAX, V_I = 0.4 V					– 1.6	mA
	strobe inputs						– 6.4	
I_{OS}§		V_{CC} = MAX		54 Family	– 20		– 55	mA
				74 Family	– 18		– 55	
I_{CCH}		V_{CC} = MAX, All inputs at 0 V				8	16	mA
I_{CCL}		V_{CC} = MAX, All inputs at 5 V				10	19	mA

† For conditions shown as MIN or MAX, use the appropriate value specified under recommended operating conditions for the applicable device type. Expander inputs X and $\overline{X}$ are open.
‡ All typical values are at V_{CC} = 5 V, T_A = 25°C.
§ Not more than one output should be shorted at a time.

electrical characteristics (SN5423 circuits) using expander inputs, V_{CC} = 4.5 V, T_A = – 55°C

PARAMETER		TEST CONDITIONS			MIN	TYP†	MAX	UNIT
$I_{\overline{X}}$	Expander current	$V_{X\overline{X}}$ = 0.4 V,	I_{OL} = 16 mA				– 3.5	mA
$V_{BE(Q)}$	Base-Emitter voltage of output transistor (Q)	I_{OL} = 16 mA,	$I_X + I_{\overline{X}}$ = 0.41 mA,	$R_{X\overline{X}}$ = 0			1.1	V
V_{OH}	High-level output voltage	I_{OH} = – 0.4 mA,	I_X = 0.15 mA,	$I_{\overline{X}}$ = – 0.15 mA	2.4	3.4		V
V_{OL}	Low-level output voltage	I_{OL} = 16 mA,	$I_X + I_{\overline{X}}$ = 0.3 mA,	$R_{X\overline{X}}$ = 114 Ω		0.2	0.4	V

electrical characteristics (SN7423 circuits) using expander inputs, V_{CC} = 4.75 V, T_A = 0°C

PARAMETER		TEST CONDITIONS			MIN	TYP†	MAX	UNIT
$I_{\overline{X}}$	Expander current	$V_{X\overline{X}}$ = 0.4 V,	I_{OL} = 16 mA				– 3.8	mA
$V_{BE(Q)}$	Base-Emitter voltage of output transistor (Q)	I_{OL} = 16 mA,	$I_X + I_{\overline{X}}$ = 0.62 mA,	$R_{X\overline{X}}$ = 0			1	V
V_{OH}	High-level output voltage	I_{OH} = – 0.4 mA,	I_X = 0.27 mA,	$I_{\overline{X}}$ = – 0.27 mA	2.4	3.4		V
V_{OL}	Low-level output voltage	I_{OL} = 16 mA,	$I_X + I_{\overline{X}}$ = 0.43 mA,	$R_{X\overline{X}}$ = 130 Ω		0.2	0.4	V

† All typical values are at V_{CC} = 5 V, T_A = 25°C.

switching characteristics, V_{CC} = 5 V, T_A = 25°C, N = 10, (see note 3)

PARAMETER	TEST CONDITIONS		MIN	TYP	MAX	UNIT
t_{PLH}	R_L = 400 Ω,	C_L = 15 pF		13	22	ns
t_{PHL}	R_L = 400 Ω,	C_L = 15 pF		8	15	ns

NOTE 3: Switching characteristics of the SN5423 and SN7424 are tested with the expander pins open.

PACKAGING INFORMATION

Orderable Device	Status [1]	Package Type	Package Drawing	Pins	Package Qty	Eco Plan [2]	Lead/Ball Finish	MSL Peak Temp [3]
5962-9763601QEA	ACTIVE	CDIP	J	16	1	TBD	A42 SNPB	N / A for Pkg Type
JM38510/00403BCA	ACTIVE	CDIP	J	14	1	TBD	A42 SNPB	N / A for Pkg Type
JM38510/00403BCA	ACTIVE	CDIP	J	14	1	TBD	A42 SNPB	N / A for Pkg Type
SN5423J	ACTIVE	CDIP	J	16	1	TBD	A42 SNPB	N / A for Pkg Type
SN5423J	ACTIVE	CDIP	J	16	1	TBD	A42 SNPB	N / A for Pkg Type
SN5425J	ACTIVE	CDIP	J	14	1	TBD	A42 SNPB	N / A for Pkg Type
SN5425J	ACTIVE	CDIP	J	14	1	TBD	A42 SNPB	N / A for Pkg Type
SN7423N	OBSOLETE	PDIP	N	16		TBD	Call TI	Call TI
SN7423N	OBSOLETE	PDIP	N	16		TBD	Call TI	Call TI
SN7425N	ACTIVE	PDIP	N	14	25	Pb-Free (RoHS)	CU NIPDAU	N / A for Pkg Type
SN7425N	ACTIVE	PDIP	N	14	25	Pb-Free (RoHS)	CU NIPDAU	N / A for Pkg Type
SN7425N3	OBSOLETE	PDIP	N	14		TBD	Call TI	Call TI
SN7425N3	OBSOLETE	PDIP	N	14		TBD	Call TI	Call TI
SN7425NE4	ACTIVE	PDIP	N	14	25	Pb-Free (RoHS)	CU NIPDAU	N / A for Pkg Type
SN7425NE4	ACTIVE	PDIP	N	14	25	Pb-Free (RoHS)	CU NIPDAU	N / A for Pkg Type
SNJ5423J	ACTIVE	CDIP	J	16	1	TBD	A42 SNPB	N / A for Pkg Type
SNJ5423J	ACTIVE	CDIP	J	16	1	TBD	A42 SNPB	N / A for Pkg Type
SNJ5423W	OBSOLETE			16		TBD	Call TI	Call TI
SNJ5423W	OBSOLETE			16		TBD	Call TI	Call TI
SNJ5425J	ACTIVE	CDIP	J	14	1	TBD	A42 SNPB	N / A for Pkg Type
SNJ5425J	ACTIVE	CDIP	J	14	1	TBD	A42 SNPB	N / A for Pkg Type
SNJ5425W	ACTIVE	CFP	W	14	1	TBD	A42	N / A for Pkg Type
SNJ5425W	ACTIVE	CFP	W	14	1	TBD	A42	N / A for Pkg Type

[1] The marketing status values are defined as follows:
ACTIVE: Product device recommended for new designs.
LIFEBUY: TI has announced that the device will be discontinued, and a lifetime-buy period is in effect.
NRND: Not recommended for new designs. Device is in production to support existing customers, but TI does not recommend using this part in a new design.
PREVIEW: Device has been announced but is not in production. Samples may or may not be available.
OBSOLETE: TI has discontinued the production of the device.

[2] Eco Plan - The planned eco-friendly classification: Pb-Free (RoHS), Pb-Free (RoHS Exempt), or Green (RoHS & no Sb/Br) - please check http://www.ti.com/productcontent for the latest availability information and additional product content details.
TBD: The Pb-Free/Green conversion plan has not been defined.
Pb-Free (RoHS): TI's terms "Lead-Free" or "Pb-Free" mean semiconductor products that are compatible with the current RoHS requirements for all 6 substances, including the requirement that lead not exceed 0.1% by weight in homogeneous materials. Where designed to be soldered at high temperatures, TI Pb-Free products are suitable for use in specified lead-free processes.
Pb-Free (RoHS Exempt): This component has a RoHS exemption for either 1) lead-based flip-chip solder bumps used between the die and package, or 2) lead-based die adhesive used between the die and leadframe. The component is otherwise considered Pb-Free (RoHS compatible) as defined above.
Green (RoHS & no Sb/Br): TI defines "Green" to mean Pb-Free (RoHS compatible), and free of Bromine (Br) and Antimony (Sb) based flame retardants (Br or Sb do not exceed 0.1% by weight in homogeneous material)

[3] MSL, Peak Temp. -- The Moisture Sensitivity Level rating according to the JEDEC industry standard classifications, and peak solder

temperature.

Important Information and Disclaimer: The information provided on this page represents TI's knowledge and belief as of the date that it is provided. TI bases its knowledge and belief on information provided by third parties, and makes no representation or warranty as to the accuracy of such information. Efforts are underway to better integrate information from third parties. TI has taken and continues to take reasonable steps to provide representative and accurate information but may not have conducted destructive testing or chemical analysis on incoming materials and chemicals. TI and TI suppliers consider certain information to be proprietary, and thus CAS numbers and other limited information may not be available for release.

In no event shall TI's liability arising out of such information exceed the total purchase price of the TI part(s) at issue in this document sold by TI to Customer on an annual basis.

J (R–GDIP–T**)

14 LEADS SHOWN

CERAMIC DUAL IN–LINE PACKAGE

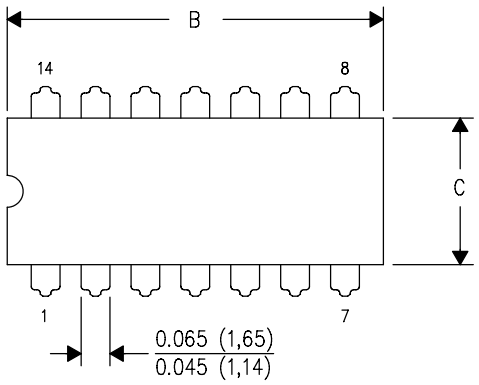

DIM \ PINS **	14	16	18	20
A	0.300 (7,62) BSC	0.300 (7,62) BSC	0.300 (7,62) BSC	0.300 (7,62) BSC
B MAX	0.785 (19,94)	.840 (21,34)	0.960 (24,38)	1.060 (26,92)
B MIN	—	—	—	—
C MAX	0.300 (7,62)	0.300 (7,62)	0.310 (7,87)	0.300 (7,62)
C MIN	0.245 (6,22)	0.245 (6,22)	0.220 (5,59)	0.245 (6,22)

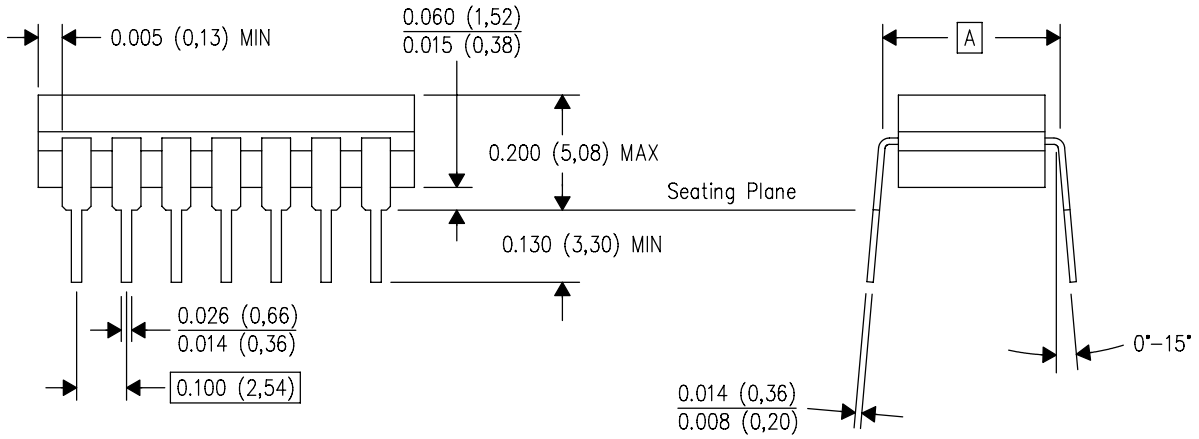

4040083/F 03/03

NOTES:
A. All linear dimensions are in inches (millimeters).
B. This drawing is subject to change without notice.
C. This package is hermetically sealed with a ceramic lid using glass frit.
D. Index point is provided on cap for terminal identification only on press ceramic glass frit seal only.
E. Falls within MIL STD 1835 GDIP1–T14, GDIP1–T16, GDIP1–T18 and GDIP1–T20.

W (R–GDFP–F14) CERAMIC DUAL FLATPACK

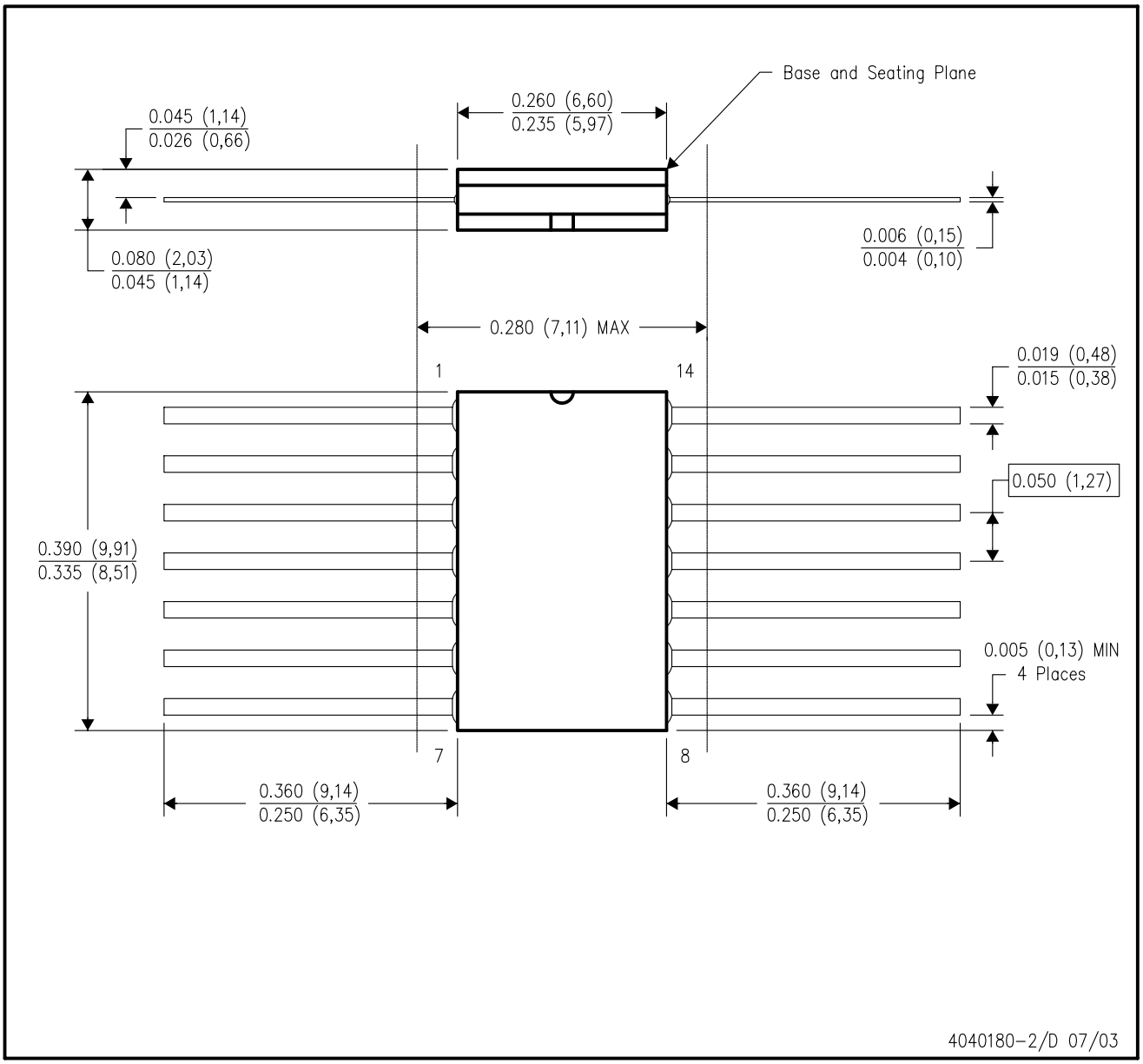

NOTES:
A. All linear dimensions are in inches (millimeters).
B. This drawing is subject to change without notice.
C. This package can be hermetically sealed with a ceramic lid using glass frit.
D. Index point is provided on cap for terminal identification only.
E. Falls within MIL STD 1835 GDFP1–F14 and JEDEC MO–092AB

N (R–PDIP–T**)

PLASTIC DUAL–IN–LINE PACKAGE

16 PINS SHOWN

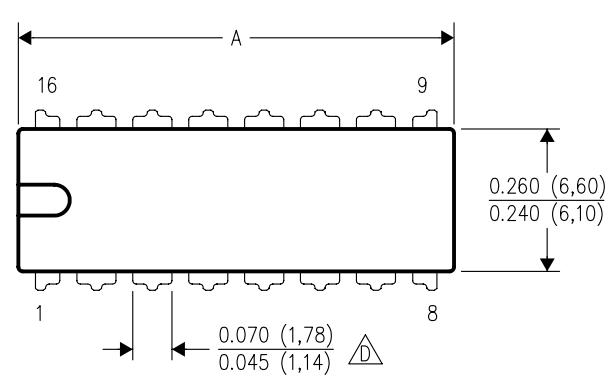

DIM \ PINS **	14	16	18	20
A MAX	0.775 (19,69)	0.775 (19,69)	0.920 (23,37)	1.060 (26,92)
A MIN	0.745 (18,92)	0.745 (18,92)	0.850 (21,59)	0.940 (23,88)
MS–001 VARIATION (C)	AA	BB	AC	AD

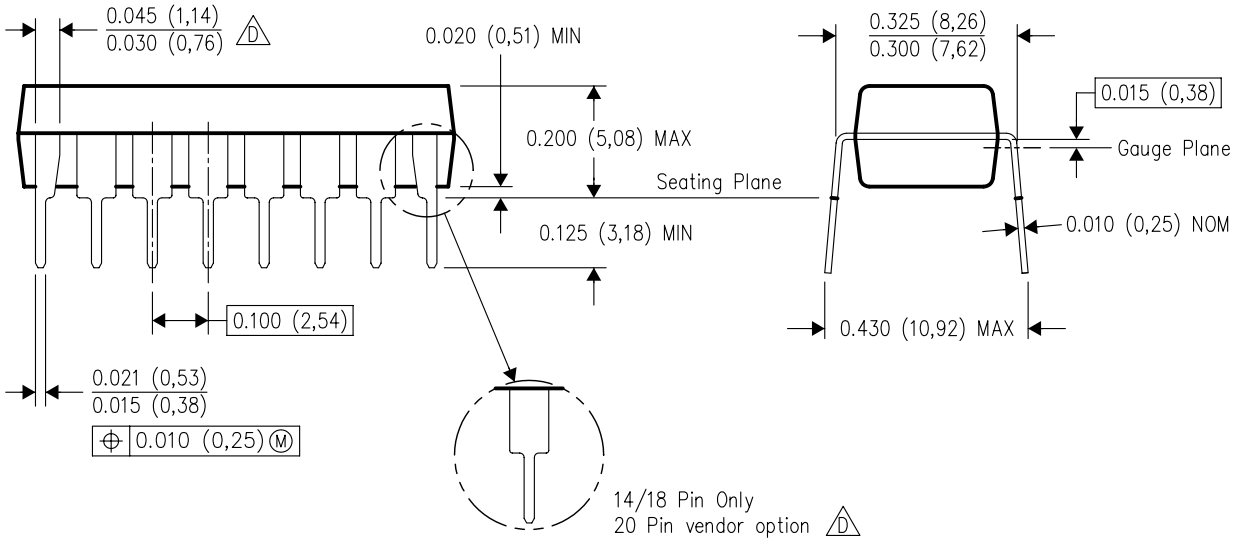

4040049/E 12/2002

NOTES:
A. All linear dimensions are in inches (millimeters).
B. This drawing is subject to change without notice.
C. Falls within JEDEC MS–001, except 18 and 20 pin minimum body length (Dim A).
D. The 20 pin end lead shoulder width is a vendor option, either half or full width.

PACKAGING INFORMATION

Orderable part number	Status (1)	Material type (2)	Package | Pins	Package qty | Carrier	RoHS (3)	Lead finish/ Ball material (4)	MSL rating/ Peak reflow (5)	Op temp (°C)	Part marking (6)
5962-9763601QEA	Active	Production	CDIP (J) | 16	25 | TUBE	No	SNPB	N/A for Pkg Type	-55 to 125	5962-9763601QE A SNJ5423J
JM38510/00403BCA	Active	Production	CDIP (J) | 14	25 | TUBE	No	SNPB	N/A for Pkg Type	-55 to 125	JM38510/ 00403BCA
JM38510/00403BCA	Active	Production	CDIP (J) | 14	25 | TUBE	No	SNPB	N/A for Pkg Type	-55 to 125	JM38510/ 00403BCA
JM38510/00403BCA.A	Active	Production	CDIP (J) | 14	25 | TUBE	No	SNPB	N/A for Pkg Type	-55 to 125	JM38510/ 00403BCA
JM38510/00403BCA.A	Active	Production	CDIP (J) | 14	25 | TUBE	No	SNPB	N/A for Pkg Type	-55 to 125	JM38510/ 00403BCA
M38510/00403BCA	Active	Production	CDIP (J) | 14	25 | TUBE	No	SNPB	N/A for Pkg Type	-55 to 125	JM38510/ 00403BCA
M38510/00403BCA	Active	Production	CDIP (J) | 14	25 | TUBE	No	SNPB	N/A for Pkg Type	-55 to 125	JM38510/ 00403BCA
SN5425J	Active	Production	CDIP (J) | 14	25 | TUBE	No	SNPB	N/A for Pkg Type	-55 to 125	SN5425J
SN5425J	Active	Production	CDIP (J) | 14	25 | TUBE	No	SNPB	N/A for Pkg Type	-55 to 125	SN5425J
SN5425J.A	Active	Production	CDIP (J) | 14	25 | TUBE	No	SNPB	N/A for Pkg Type	-55 to 125	SN5425J
SN5425J.A	Active	Production	CDIP (J) | 14	25 | TUBE	No	SNPB	N/A for Pkg Type	-55 to 125	SN5425J
SN7425N	Active	Production	PDIP (N) | 14	25 | TUBE	Yes	NIPDAU	N/A for Pkg Type	0 to 70	SN7425N
SN7425N	Active	Production	PDIP (N) | 14	25 | TUBE	Yes	NIPDAU	N/A for Pkg Type	0 to 70	SN7425N
SN7425N.A	Active	Production	PDIP (N) | 14	25 | TUBE	Yes	NIPDAU	N/A for Pkg Type	0 to 70	SN7425N
SN7425N.A	Active	Production	PDIP (N) | 14	25 | TUBE	Yes	NIPDAU	N/A for Pkg Type	0 to 70	SN7425N
SNJ5423J	Active	Production	CDIP (J) | 16	25 | TUBE	No	SNPB	N/A for Pkg Type	-55 to 125	5962-9763601QE A SNJ5423J
SNJ5423J	Active	Production	CDIP (J) | 16	25 | TUBE	No	SNPB	N/A for Pkg Type	-55 to 125	5962-9763601QE A SNJ5423J
SNJ5423J.A	Active	Production	CDIP (J) | 16	25 | TUBE	No	SNPB	N/A for Pkg Type	-55 to 125	5962-9763601QE A SNJ5423J

Orderable part number	Status (1)	Material type (2)	Package | Pins	Package qty | Carrier	RoHS (3)	Lead finish/ Ball material (4)	MSL rating/ Peak reflow (5)	Op temp (°C)	Part marking (6)
SNJ5423J.A	Active	Production	CDIP (J) | 16	25 | TUBE	No	SNPB	N/A for Pkg Type	-55 to 125	5962-9763601QE A SNJ5423J
SNJ5425J	Active	Production	CDIP (J) | 14	25 | TUBE	No	SNPB	N/A for Pkg Type	-55 to 125	SNJ5425J
SNJ5425J	Active	Production	CDIP (J) | 14	25 | TUBE	No	SNPB	N/A for Pkg Type	-55 to 125	SNJ5425J
SNJ5425J.A	Active	Production	CDIP (J) | 14	25 | TUBE	No	SNPB	N/A for Pkg Type	-55 to 125	SNJ5425J
SNJ5425J.A	Active	Production	CDIP (J) | 14	25 | TUBE	No	SNPB	N/A for Pkg Type	-55 to 125	SNJ5425J
SNJ5425W	Active	Production	CFP (W) | 14	25 | TUBE	No	SNPB	N/A for Pkg Type	-55 to 125	SNJ5425W
SNJ5425W	Active	Production	CFP (W) | 14	25 | TUBE	No	SNPB	N/A for Pkg Type	-55 to 125	SNJ5425W
SNJ5425W.A	Active	Production	CFP (W) | 14	25 | TUBE	No	SNPB	N/A for Pkg Type	-55 to 125	SNJ5425W
SNJ5425W.A	Active	Production	CFP (W) | 14	25 | TUBE	No	SNPB	N/A for Pkg Type	-55 to 125	SNJ5425W

(1) **Status:** For more details on status, see our product life cycle.

(2) **Material type:** When designated, preproduction parts are prototypes/experimental devices, and are not yet approved or released for full production. Testing and final process, including without limitation quality assurance, reliability performance testing, and/or process qualification, may not yet be complete, and this item is subject to further changes or possible discontinuation. If available for ordering, purchases will be subject to an additional waiver at checkout, and are intended for early internal evaluation purposes only. These items are sold without warranties of any kind.

(3) **RoHS values:** Yes, No, RoHS Exempt. See the TI RoHS Statement for additional information and value definition.

(4) **Lead finish/Ball material:** Parts may have multiple material finish options. Finish options are separated by a vertical ruled line. Lead finish/Ball material values may wrap to two lines if the finish value exceeds the maximum column width.

(5) **MSL rating/Peak reflow:** The moisture sensitivity level ratings and peak solder (reflow) temperatures. In the event that a part has multiple moisture sensitivity ratings, only the lowest level per JEDEC standards is shown. Refer to the shipping label for the actual reflow temperature that will be used to mount the part to the printed circuit board.

(6) **Part marking:** There may be an additional marking, which relates to the logo, the lot trace code information, or the environmental category of the part.

Multiple part markings will be inside parentheses. Only one part marking contained in parentheses and separated by a "~" will appear on a part. If a line is indented then it is a continuation of the previous line and the two combined represent the entire part marking for that device.

Important Information and Disclaimer: The information provided on this page represents TI's knowledge and belief as of the date that it is provided. TI bases its knowledge and belief on information provided by third parties, and makes no representation or warranty as to the accuracy of such information. Efforts are underway to better integrate information from third parties. TI has taken and continues to take reasonable steps to provide representative

and accurate information but may not have conducted destructive testing or chemical analysis on incoming materials and chemicals. TI and TI suppliers consider certain information to be proprietary, and thus CAS numbers and other limited information may not be available for release.

In no event shall TI's liability arising out of such information exceed the total purchase price of the TI part(s) at issue in this document sold by TI to Customer on an annual basis.

OTHER QUALIFIED VERSIONS OF SN5425, SN7425 :

- Catalog : SN7425
- Military : SN5425

NOTE: Qualified Version Definitions:

- Catalog - TI's standard catalog product
- Military - QML certified for Military and Defense Applications

TUBE

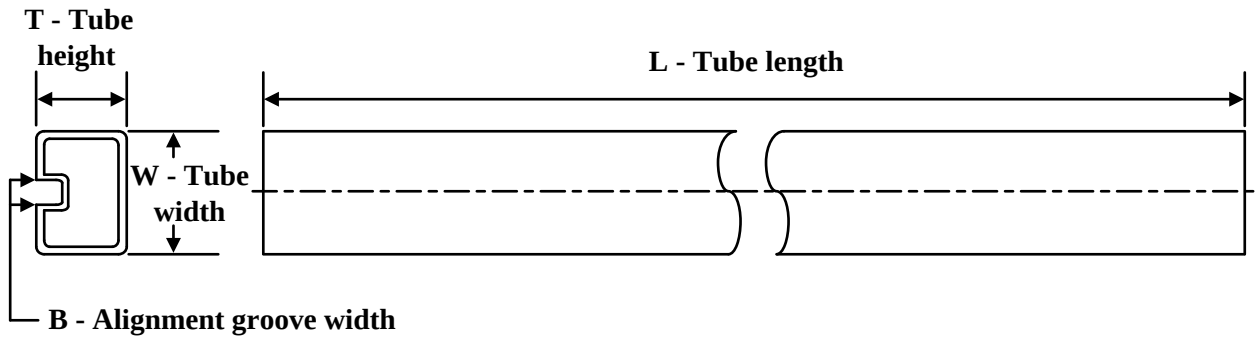

*All dimensions are nominal

Device	Package Name	Package Type	Pins	SPQ	L (mm)	W (mm)	T (µm)	B (mm)
SN7425N	N	PDIP	14	25	506	13.97	11230	4.32
SN7425N	N	PDIP	14	25	506	13.97	11230	4.32
SN7425N.A	N	PDIP	14	25	506	13.97	11230	4.32
SN7425N.A	N	PDIP	14	25	506	13.97	11230	4.32
SNJ5425W	W	CFP	14	25	506.98	26.16	6220	NA
SNJ5425W.A	W	CFP	14	25	506.98	26.16	6220	NA

J (R–GDIP–T**)

14 LEADS SHOWN

CERAMIC DUAL IN–LINE PACKAGE

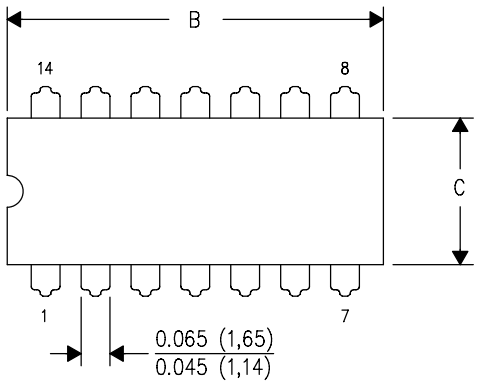

DIM \ PINS **	14	16	18	20
A	0.300 (7,62) BSC	0.300 (7,62) BSC	0.300 (7,62) BSC	0.300 (7,62) BSC
B MAX	0.785 (19,94)	.840 (21,34)	0.960 (24,38)	1.060 (26,92)
B MIN	—	—	—	—
C MAX	0.300 (7,62)	0.300 (7,62)	0.310 (7,87)	0.300 (7,62)
C MIN	0.245 (6,22)	0.245 (6,22)	0.220 (5,59)	0.245 (6,22)

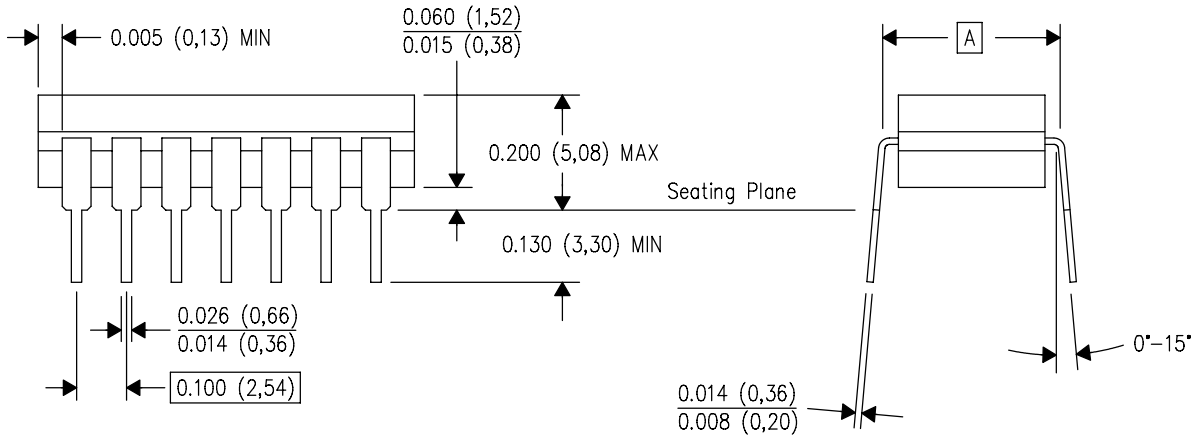

4040083/F 03/03

NOTES:
A. All linear dimensions are in inches (millimeters).
B. This drawing is subject to change without notice.
C. This package is hermetically sealed with a ceramic lid using glass frit.
D. Index point is provided on cap for terminal identification only on press ceramic glass frit seal only.
E. Falls within MIL STD 1835 GDIP1–T14, GDIP1–T16, GDIP1–T18 and GDIP1–T20.

GENERIC PACKAGE VIEW

J 14 CDIP - 5.08 mm max height

CERAMIC DUAL IN LINE PACKAGE

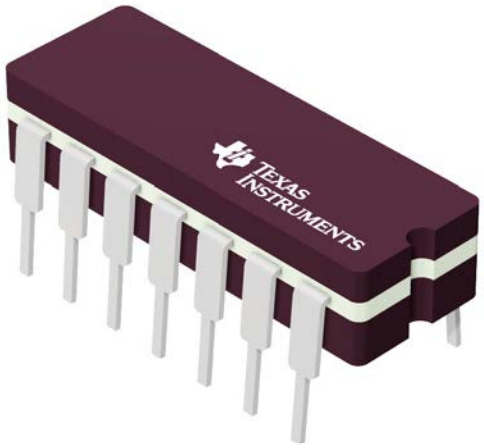

Images above are just a representation of the package family, actual package may vary.
Refer to the product data sheet for package details.

4040083-5/G



PACKAGE OUTLINE

J0014A

CDIP - 5.08 mm max height

CERAMIC DUAL IN LINE PACKAGE

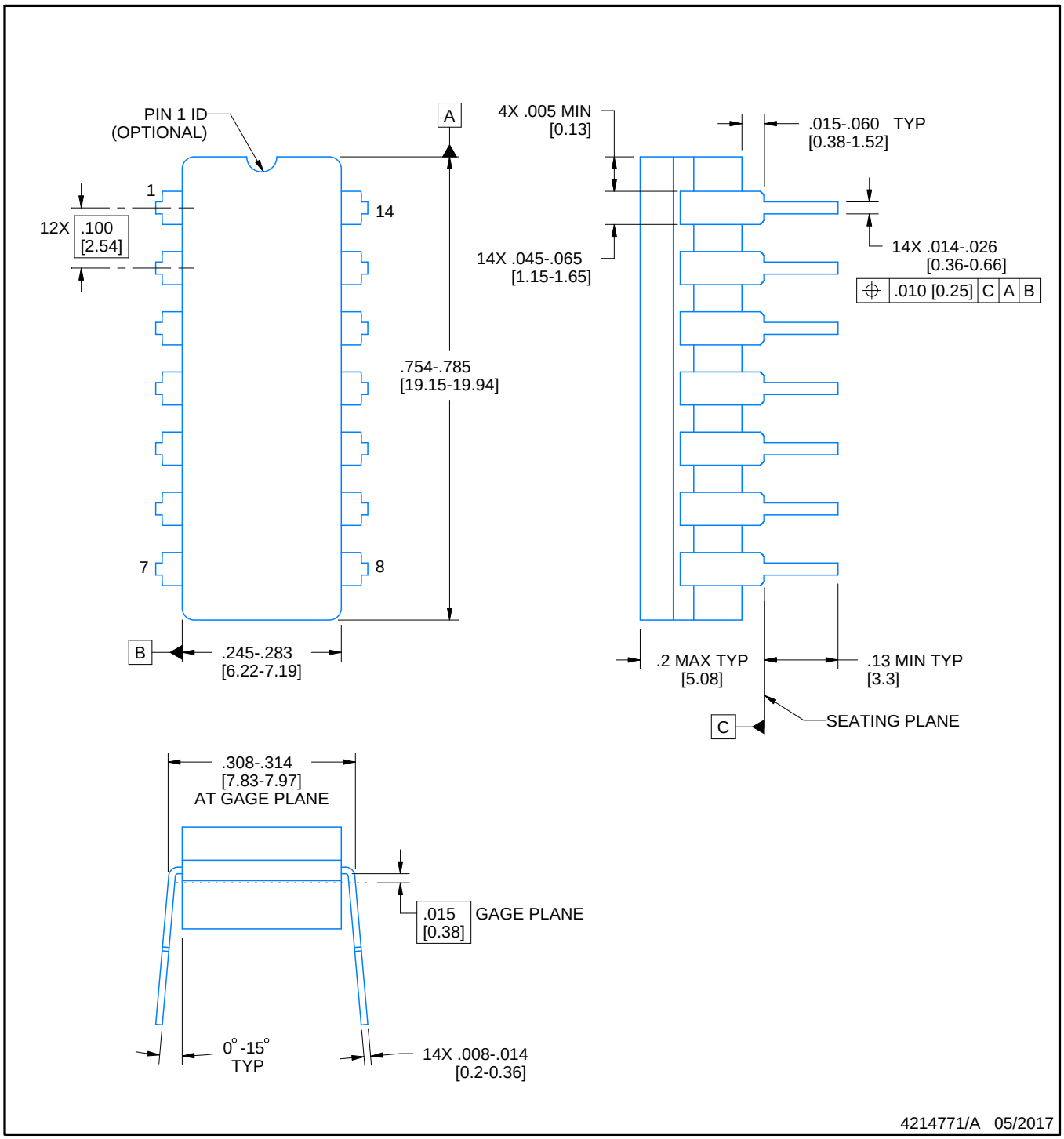

NOTES:

1. All controlling linear dimensions are in inches. Dimensions in brackets are in millimeters. Any dimension in brackets or parenthesis are for reference only. Dimensioning and tolerancing per ASME Y14.5M.
2. This drawing is subject to change without notice.
3. This package is hermitically sealed with a ceramic lid using glass frit.
4. Index point is provided on cap for terminal identification only and on press ceramic glass frit seal only.
5. Falls within MIL-STD-1835 and GDIP1-T14.

EXAMPLE BOARD LAYOUT

J0014A

CDIP - 5.08 mm max height

CERAMIC DUAL IN LINE PACKAGE

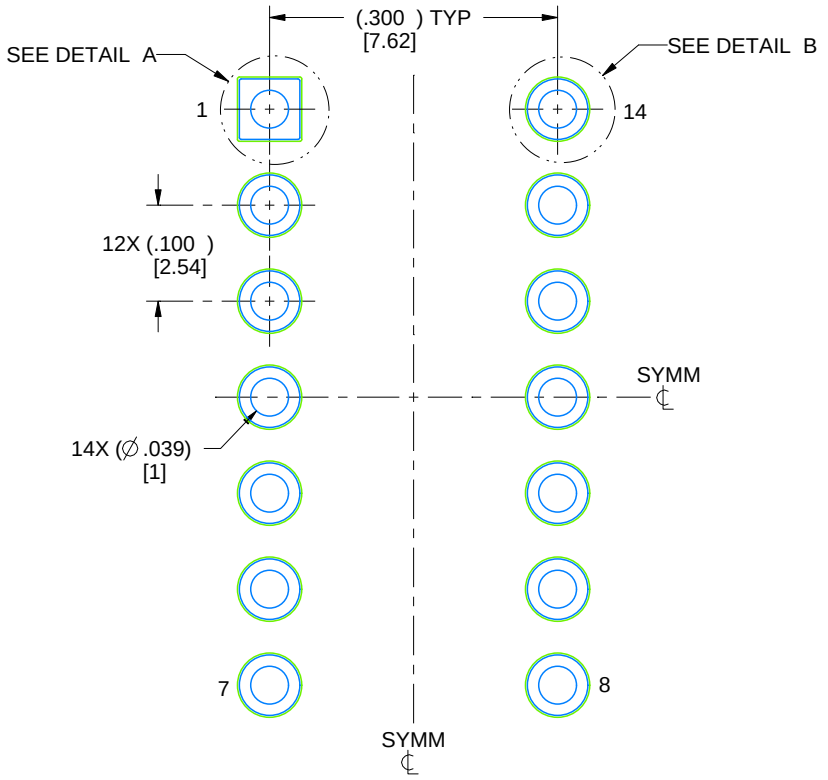

LAND PATTERN EXAMPLE
NON-SOLDER MASK DEFINED
SCALE: 5X

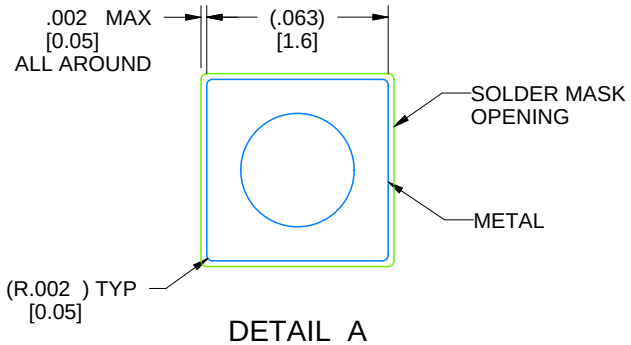

DETAIL A
SCALE: 15X

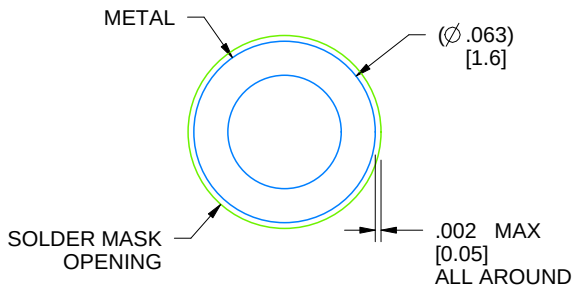

DETAIL B
13X, SCALE: 15X

4214771/A 05/2017

N (R–PDIP–T**)

PLASTIC DUAL–IN–LINE PACKAGE

16 PINS SHOWN

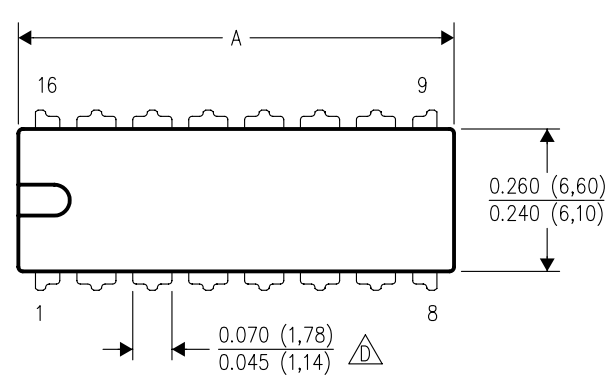

DIM \ PINS **	14	16	18	20
A MAX	0.775 (19,69)	0.775 (19,69)	0.920 (23,37)	1.060 (26,92)
A MIN	0.745 (18,92)	0.745 (18,92)	0.850 (21,59)	0.940 (23,88)
MS–001 VARIATION (C)	AA	BB	AC	AD

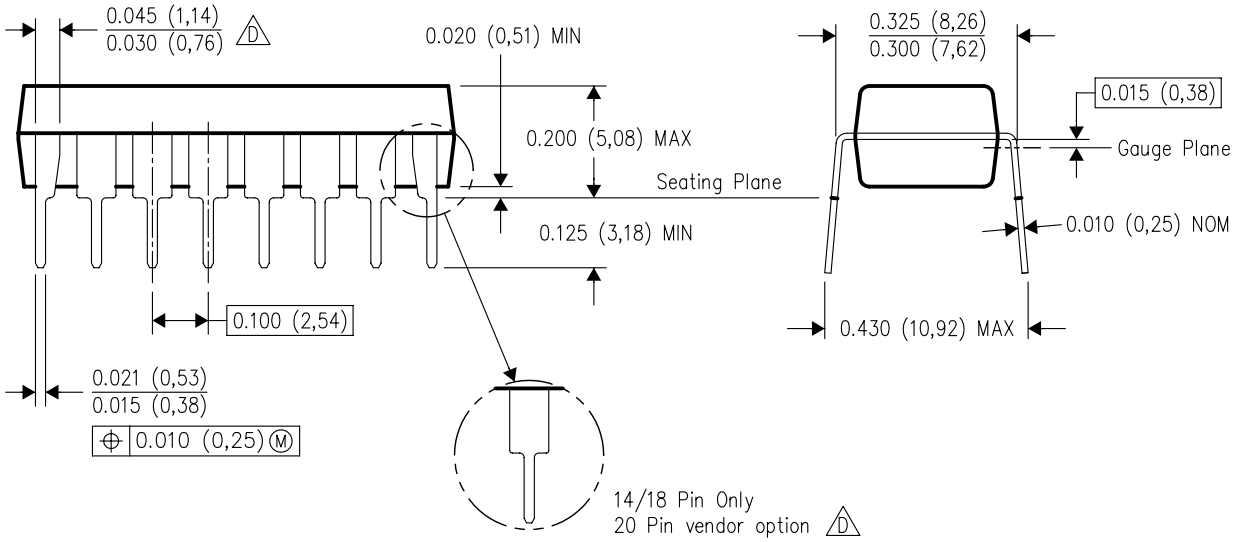

4040049/E 12/2002

NOTES:
A. All linear dimensions are in inches (millimeters).
B. This drawing is subject to change without notice.
C. Falls within JEDEC MS–001, except 18 and 20 pin minimum body length (Dim A).
D. The 20 pin end lead shoulder width is a vendor option, either half or full width.

W (R–GDFP–F14) CERAMIC DUAL FLATPACK

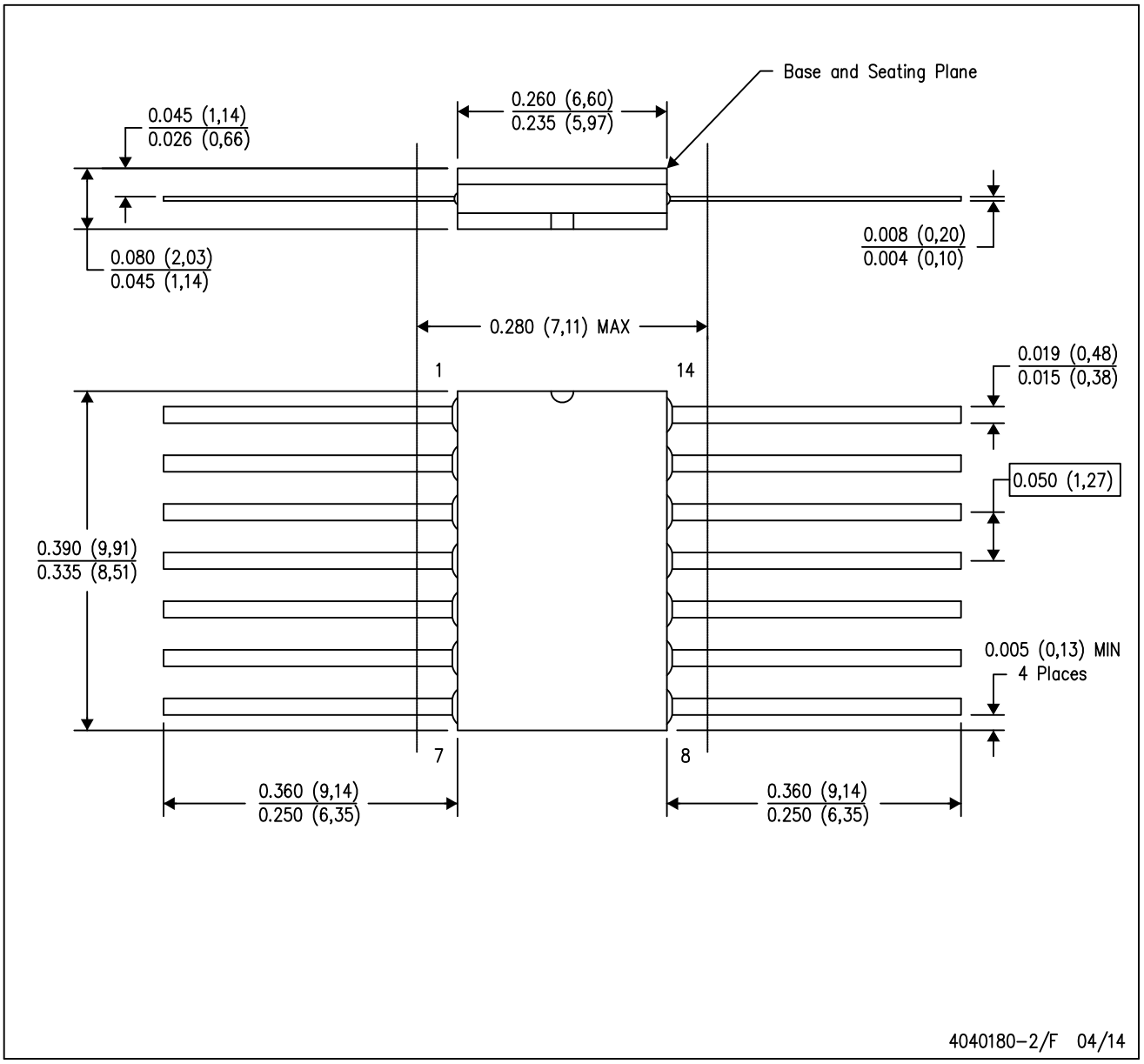

NOTES:
A. All linear dimensions are in inches (millimeters).
B. This drawing is subject to change without notice.
C. This package can be hermetically sealed with a ceramic lid using glass frit.
D. Index point is provided on cap for terminal identification only.
E. Falls within MIL STD 1835 GDFP1–F14

IMPORTANT NOTICE AND DISCLAIMER

TI PROVIDES TECHNICAL AND RELIABILITY DATA (INCLUDING DATA SHEETS), DESIGN RESOURCES (INCLUDING REFERENCE DESIGNS), APPLICATION OR OTHER DESIGN ADVICE, WEB TOOLS, SAFETY INFORMATION, AND OTHER RESOURCES “AS IS” AND WITH ALL FAULTS, AND DISCLAIMS ALL WARRANTIES, EXPRESS AND IMPLIED, INCLUDING WITHOUT LIMITATION ANY IMPLIED WARRANTIES OF MERCHANTABILITY, FITNESS FOR A PARTICULAR PURPOSE OR NON-INFRINGEMENT OF THIRD PARTY INTELLECTUAL PROPERTY RIGHTS.

These resources are intended for skilled developers designing with TI products. You are solely responsible for (1) selecting the appropriate TI products for your application, (2) designing, validating and testing your application, and (3) ensuring your application meets applicable standards, and any other safety, security, regulatory or other requirements.

These resources are subject to change without notice. TI grants you permission to use these resources only for development of an application that uses the TI products described in the resource. Other reproduction and display of these resources is prohibited. No license is granted to any other TI intellectual property right or to any third party intellectual property right. TI disclaims responsibility for, and you will fully indemnify TI and its representatives against, any claims, damages, costs, losses, and liabilities arising out of your use of these resources.

TI’s products are provided subject to TI’s Terms of Sale or other applicable terms available either on ti.com or provided in conjunction with such TI products. TI’s provision of these resources does not expand or otherwise alter TI’s applicable warranties or warranty disclaimers for TI products.

TI objects to and rejects any additional or different terms you may have proposed.

Mailing Address: Texas Instruments, Post Office Box 655303, Dallas, Texas 75265
Copyright © 2025, Texas Instruments Incorporated