FB3500..... FB3510
FB3500L..... FB3510L

35 Amp. Glass Passivated Bridge Rectifier

Dimensions in mm.

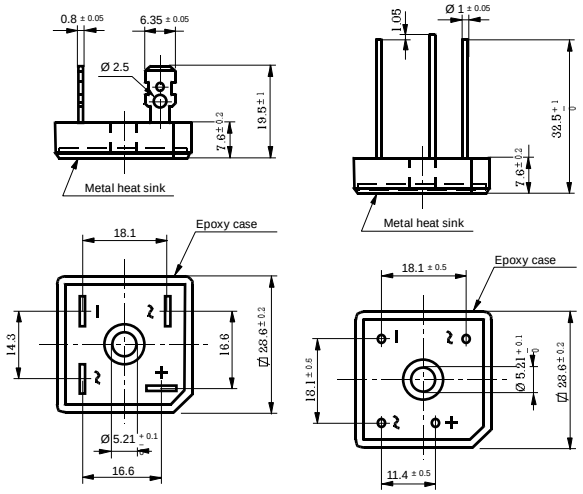

Voltage
50 to 1000 V

Current
35 A

HYPERECTIFIER®

- Glass Passivated Junction
- UL recognized under component index file number E130180
- Terminals: FASTON ①
- Terminals: WIRE LEADS ②
- Max. Mounting Torque: 25 Kg x cm

Lead and polarity identifications

High surge current capability

Maximum Ratings, according to IEC publication No. 134

	① FB3500 ② FB3500L	FB3501 FB3501L	FB3502 FB3502L	FB3504 FB3504L	FB3506 FB3506L	FB3508 FB3508L	FB3510 FB3510L
V_{RRM}	Peak Recurrent Reverse Voltage (V)	50	100	200	400	600	800	1000
V_{RMS}	Maximum RMS Voltage (V)	35	70	140	280	420	560	700
V_R	Recommended Input Voltage (V)	20	40	80	125	250	380	500
$I_{F(AV)}$	Max. forward current R-load: At T case = 55 °C At T case = 90 °C With Al Square Chassis (200 cm² x 3 mm.) Tamb = 45 °C	35 A 20 A 12 A						
I_{FRM}	Recurrent peak forward current	75 A						
I_{FSM}	10 ms. peak forward current	400 A						
I^2t	I^2t value for fusing (t = 10 ms)	800 A^2sec						
T_j	Operating temperature range	– 55 to + 150 °C						
T_{stg}	Storage temperature range	– 55 to + 150 °C						

Electrical Characteristics at Tamb = 25 °C

V_F	Max. forward voltage drop per element at I_F = 17.5 A	1.1 V
I_R	Max. reverse current per element at V_{RRM} d.c.	5 µ A
R_{thj-c}	Typical thermal resistance junction to case	1.3 °C/W
	Isolation voltage from case to leads	2500 Vac

Characteristic Curves

TYPICAL FORWARD CHARACTERISTIC

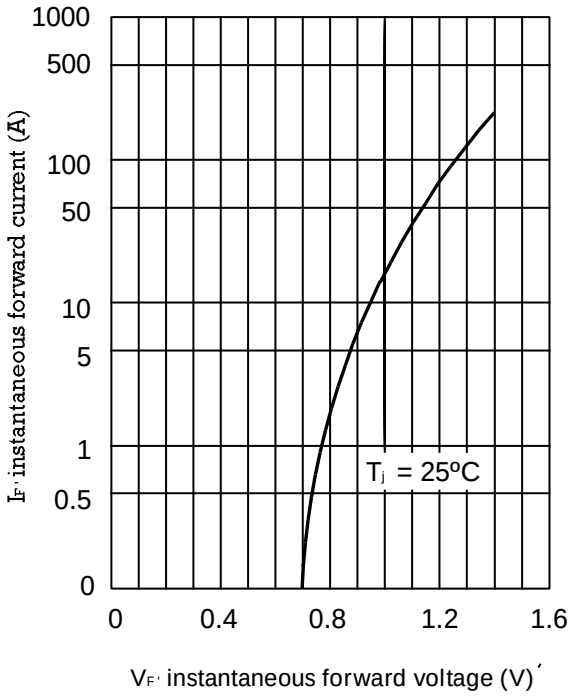

MAXIMUM NON-REPETITIVE
PEAK FORWARD SURGE CURRENT

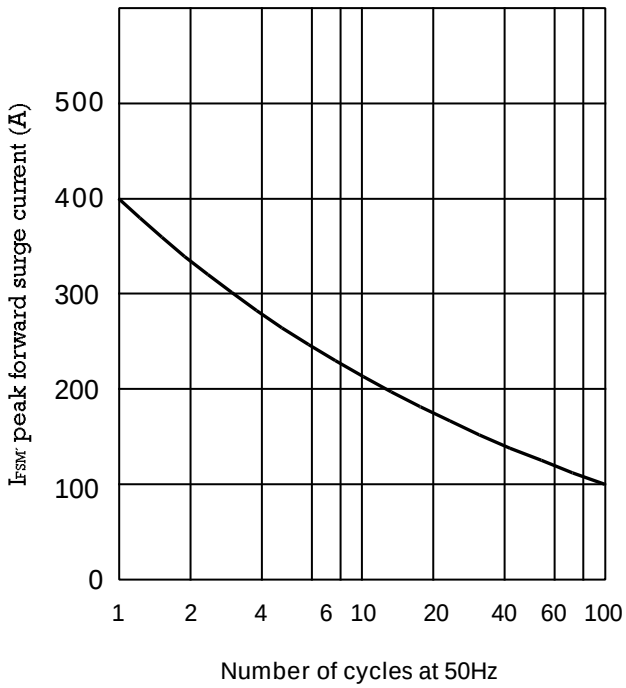

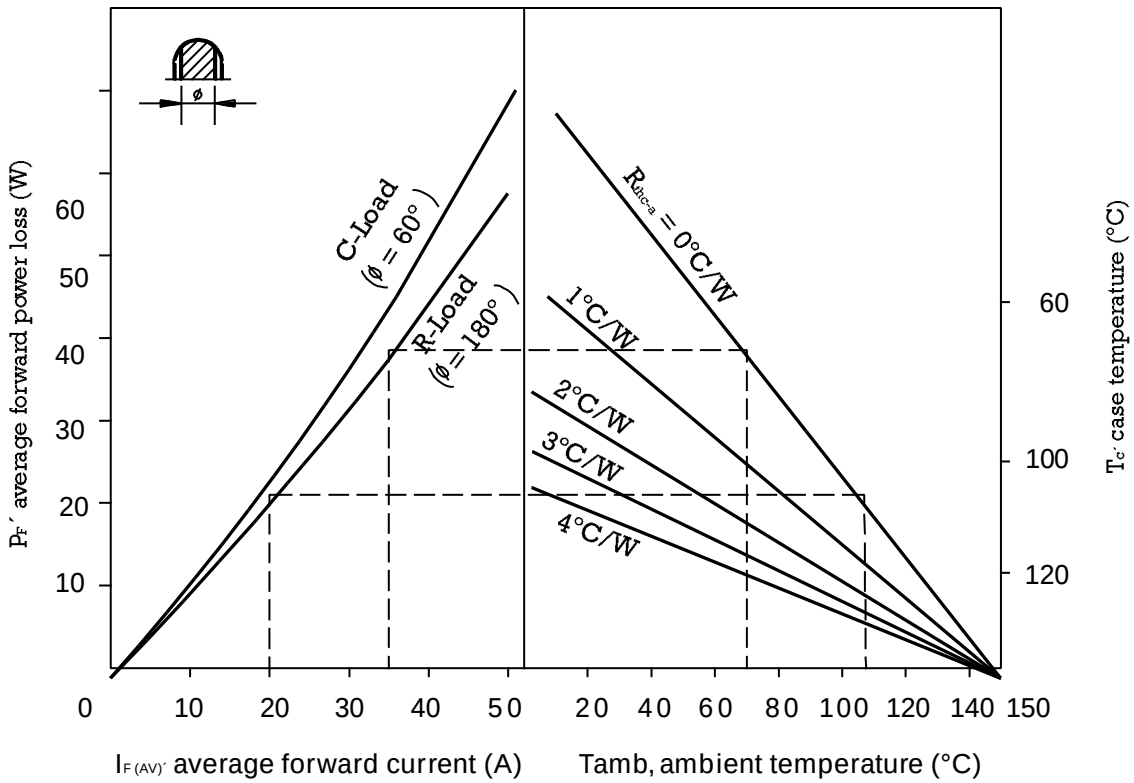

Interrelation between power dissipation and the max. allowable ambient temperature.