LM4250

LM4250 Programmable Operational Amplifier



Literature Number: SNOSC17A

National Semiconductor

August 2000

LM4250
Programmable Operational Amplifier

General Description

The LM4250 and LM4250C are extremely versatile programmable monolithic operational amplifiers. A single external master bias current setting resistor programs the input bias current, input offset current, quiescent power consumption, slew rate, input noise, and the gain-bandwidth product. The device is a truly general purpose operational amplifier.

The LM4250C is identical to the LM4250 except that the LM4250C has its performance guaranteed over a 0˚C to +70˚C temperature range instead of the −55˚C to +125˚C temperature range of the LM4250.

Features

- ±1V to ±18V power supply operation
- 3 nA input offset current
- Standby power consumption as low as 500 nW
- No frequency compensation required
- Programmable electrical characteristics
- Offset voltage nulling capability
- Can be powered by two flashlight batteries
- Short circuit protection

Connection Diagrams

Metal Can Package

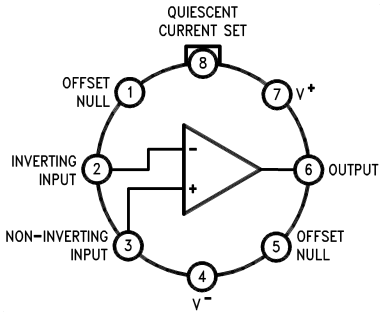

DS009300-2

Top View

Dual-In-Line Package

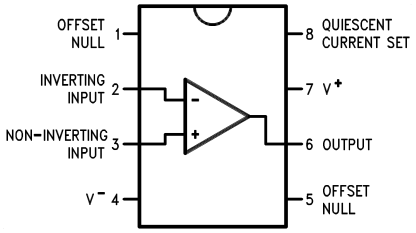

DS009300-5

Top View

X5 Difference Amplifier

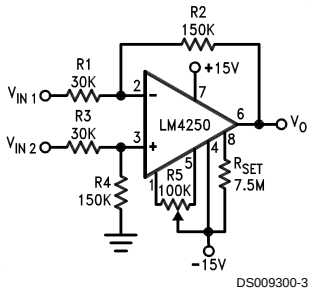

DS009300-3

Quiescent P_D = 0.6 mW

500 Nano-Watt X10 Amplifier

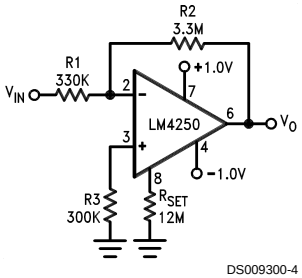

DS009300-4

Quiescent P_D = 500 nW

© 2000 National Semiconductor Corporation

Absolute Maximum Ratings (Note 1)

If Military/Aerospace specified devices are required, please contact the National Semiconductor Sales Office/ Distributors for availability and specifications.

(Note 3)

	LM4250	LM4250C
Supply Voltage	±18V	±18V
Operating Temp. Range	$-55^{\circ}C \le T_A \le +125^{\circ}C$	$0^{\circ}C \le T_A \le +70^{\circ}C$
Differential Input Voltage	±30V	±30V
Input Voltage (Note 2)	±15V	±15V
I_{SET} Current	150 nA	150 nA
Output Short Circuit Duration	Continuous	Continuous
T_{JMAX}		
H-Package	150˚C	100˚C
N-Package		100˚C
J-Package	150˚C	100˚C
M-Package		100˚C
Power Dissipation at $T_A = 25^{\circ}C$		
H-Package (Still Air)	500 mW	300 mW
(400 LF/Min Air Flow)	1200 mW	1200 mW
N-Package		500 mW
J-Package	1000 mW	600 mW
M-Package		350 mW
Thermal Resistance (Typical) θ_{JA}		
H-Package (Still Air)	165˚C/W	165˚C/W
(400 LF/Min Air Flow)	65˚C/W	65˚C/W
N-Package		130˚C/W
J-Package	108˚C/W	108˚C/W
M-Package		190˚C/W
(Typical) θ_{JC}		
H-Package	21˚C/W	21˚C/W
Storage Temperature Range	−65˚C to +150˚C	−65˚C to +150˚C

Soldering Information	
Dual-In-Line Package	
Soldering (10 seconds)	260˚C
Small Outline Package	
Vapor Phase (60 seconds)	215˚C
Infrared (15 seconds)	220˚C
See AN-450 “Surface Mounting Methods and Their Effect on Product Reliability” for other methods of soldering surface mount devices.	
ESD tolerance (Note 4)	800V

Note 1: “Absolute Maximum Ratings” indicate limits beyond which damage to the device may occur. Operating Ratings indicate conditions for which the device is functional, but do not guarantee specific performance limits.

Note 2: For supply voltages less than ±15V, the absolute maximum input voltage is equal to the supply voltage.

Note 3: Refer to RETS4250X for military specifications.

Note 4: Human body model, 1.5 kΩ in series with 100 pF.

Resistor Biasing

Set Current Setting Resistor to V^-

	I_{SET}				
V_S	0.1 µA	0.5 µA	1.0 µA	5 µA	10 µA
±1.5V	25.6 MΩ	5.04 MΩ	2.5 MΩ	492 kΩ	244 kΩ
±3.0V	55.6 MΩ	11.0 MΩ	5.5 MΩ	1.09 MΩ	544 kΩ
±6.0V	116 MΩ	23.0 MΩ	11.5 MΩ	2.29 MΩ	1.14 MΩ
±9.0V	176 MΩ	35.0 MΩ	17.5 MΩ	3.49 MΩ	1.74 MΩ
±12.0V	236 MΩ	47.0 MΩ	23.5 MΩ	4.69 MΩ	2.34 MΩ
±15.0V	296 MΩ	59.0 MΩ	29.5 MΩ	5.89 MΩ	2.94 MΩ

Electrical Characteristics

LM4250 (−55˚C ≤ T_A ≤ +125˚C unless otherwise specified.) T_A = T_J

Parameter	Conditions	V_S = ±1.5V			
		I_{SET} = 1 µA		I_{SET} = 10 µA	
		Min	Max	Min	Max
V_{OS}	R_S ≤ 100 kΩ, T_A = 25˚C		3 mV		5 mV
I_{OS}	T_A = 25˚C		3 nA		10 nA
I_{bias}	T_A = 25˚C		7.5 nA		50 nA
Large Signal Voltage Gain	R_L = 100 kΩ, T_A = 25˚C V_O = ±0.6V, R_L = 10 kΩ	40k		 50k	
Supply Current	T_A = 25˚C		7.5 µA		80 µA
Power Consumption	T_A = 25˚C		23 µW		240 µW
V_{OS}	R_S ≤ 100 kΩ		4 mV		6 mV
I_{OS}	T_A = +125˚C T_A = −55˚C		5 nA 3 nA		10 nA 10 nA
I_{bias}			7.5 nA		50 nA
Input Voltage Range		±0.6V		±0.6V	
Large Signal Voltage Gain	V_O = ±0.5V, R_L = 100 kΩ R_L = 10 kΩ	30k		 30k	
Output Voltage Swing	R_L = 100 kΩ R_L = 10 kΩ	±0.6V		 ±0.6V	
Common Mode Rejection Ratio	R_S ≤ 10 kΩ	70 dB		70 dB	
Supply Voltage Rejection Ratio	R_S ≤ 10 kΩ	76 dB		76 dB	
Supply Current			8 µA		90 µA

Parameter	Conditions	V_S = ±15V			
		I_{SET} = 1 µA		I_{SET} = 10 µA	
		Min	Max	Min	Max
V_{OS}	R_S ≤ 100 kΩ, T_A = 25˚C		3 mV		5 mV
I_{OS}	T_A = 25˚C		3 nA		10 nA
I_{bias}	T_A = 25˚C		7.5 nA		50 nA
Large Signal Voltage Gain	R_L = 100 kΩ, T_A = 25˚C V_O = ±10V, R_L = 10 kΩ	100k		 100k	
Supply Current	T_A = 25˚C		10 µA		90 µA
Power Consumption	T_A = 25˚C		300 µW		2.7 mW
V_{OS}	R_S ≤ 100 kΩ		4 mV		6 mV
I_{OS}	T_A = +125˚C T_A = −55˚C		25 nA 3 nA		25 nA 10 nA
I_{bias}			7.5 nA		50 nA
Input Voltage Range		±13.5V		±13.5V	

Electrical Characteristics (Continued)

Parameter	Conditions	V_S = ±15V			
		I_{SET} = 1 µA		I_{SET} = 10 µA	
		Min	Max	Min	Max
Large Signal Voltage Gain	V_O = ±10V, R_L = 100 kΩ R_L = 10 kΩ	50k		 50k	
Output Voltage Swing	R_L = 100 kΩ R_L = 10 kΩ	±12V		 ±12V	
Common Mode Rejection Ratio	R_S ≤ 10 kΩ	70 dB		70 dB	
Supply Voltage Rejection Ratio	R_S ≤ 10 kΩ	76 dB		76 dB	
Supply Current			11 µA		100 µA
Power Consumption			330 µW		3 mW

Electrical Characteristics

LM4250C (0˚C ≤ T_A ≤ +70˚C unless otherwise specified.) T_A = T_J

Parameter	Conditions	V_S = ±1.5V			
		I_{SET} = 1 µA		I_{SET} = 10 µA	
		Min	Max	Min	Max
V_{OS}	R_S ≤ 100 kΩ, T_A = 25˚C		5 mV		6 mV
I_{OS}	T_A = 25˚C		6 nA		20 nA
I_{bias}	T_A = 25˚C		10 nA		75 nA
Large Signal Voltage Gain	R_L = 100 kΩ, T_A = 25˚C V_O = ±0.6V, R_L = 10 kΩ	25k		 25k	
Supply Current	T_A = 25˚C		8 µA		90 µA
Power Consumption	T_A = 25˚C		24 µW		270 µW
V_{OS}	R_S ≤ 10 kΩ		6.5 mV		7.5 mV
I_{OS}			8 nA		25 nA
I_{bias}			10 nA		80 nA
Input Voltage Range		±0.6V		±0.6V	
Large Signal Voltage Gain	V_O = ±0.5V, R_L = 100 kΩ R_L = 10 kΩ	25k		 25k	
Output Voltage Swing	R_L = 100 kΩ R_L = 10 kΩ	±0.6V		 ±0.6V	
Common Mode Rejection Ratio	R_S ≤ 10 kΩ	70 dB		70 dB	
Supply Voltage Rejection Ratio	R_S ≤ 10 kΩ	74 dB		74 dB	
Supply Current			8 µA		90 µA
Power Consumption			24 µW		270 µW

Parameter	Conditions	V_S = ±15V			
		I_{SET} = 1 µA		I_{SET} = 10 µA	
		Min	Max	Min	Max
V_{OS}	R_S ≤ 100 kΩ, T_A = 25˚C		5 mV		6 mV
I_{OS}	T_A = 25˚C		6 nA		20 nA
I_{bias}	T_A = 25˚C		10 nA		75 nA
Large Signal Voltage Gain	R_L = 100 kΩ, T_A = 25˚C V_O = ±10V, R_L = 10 kΩ	60k		 60k	
Supply Current	T_A = 25˚C		11 µA		100 µA
Power Consumption	T_A = 25˚C		330 µW		3 mW
V_{OS}	R_S ≤ 100 kΩ		6.5 mV		7.5 mV
I_{OS}			8 nA		25 nA
I_{bias}			10 nA		80 nA

Electrical Characteristics (Continued)

Parameter	Conditions	V_S = ±15V			
		I_{SET} = 1 µA		I_{SET} = 10 µA	
		Min	Max	Min	Max
Input Voltage Range		±13.5V		±13.5V	
Large Signal Voltage Gain	V_O = ±10V, R_L = 100 kΩ	50k			
	R_L = 10 kΩ			50k	
Output Voltage Swing	R_L = 100 kΩ	±12V			
	R_L = 10 kΩ			±12V	
Common Mode Rejection Ratio	$R_S \leq$ 10 kΩ	70 dB		70 dB	
Supply Voltage Rejection Ratio	$R_S \leq$ 10 kΩ	74 dB		74 dB	
Supply Current			11 µA		100 µA
Power Consumption			330 µW		3 mW

Typical Performance Characteristics

Input Bias Current vs I_{SET}

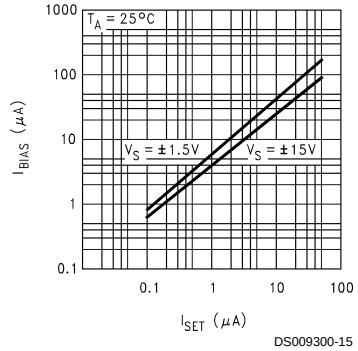

DS009300-15

Input Bias Current vs Temperature

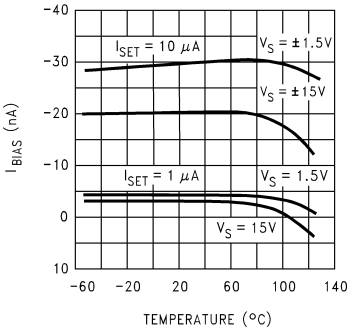

DS009300-16

Input Offset Current vs Temperature

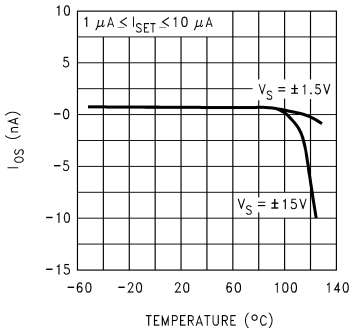

DS009300-17

Unnulled Input Offset Voltage Change vs I_{SET}

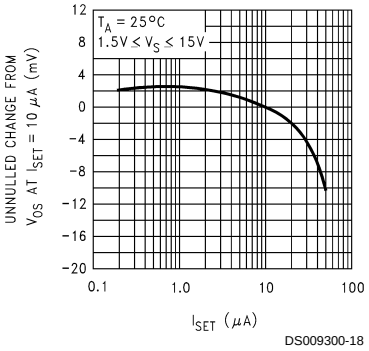

DS009300-18

Unnulled Input Offset Voltage Change vs Temperature

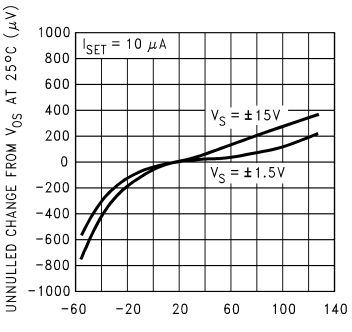

DS009300-19

Peak to Peak Output Voltage Swing vs Load Resistance

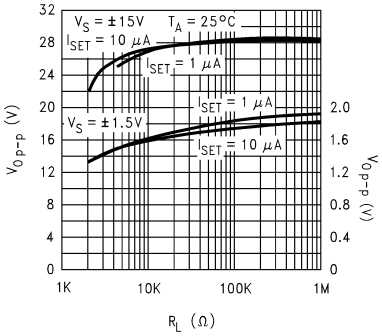

DS009300-20

Typical Performance Characteristics (Continued)

Peak to Peak Output Voltage Swing vs Supply Voltage

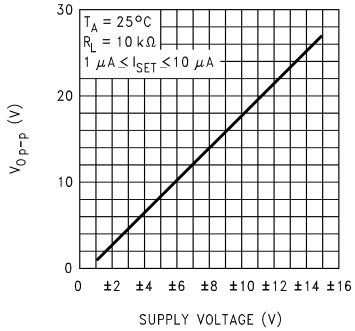

DS009300-21

Quiescent Current (I_q) vs Temperature

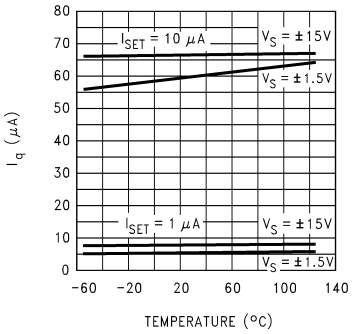

DS009300-22

Quiescent Current (I_q) vs I_{SET}

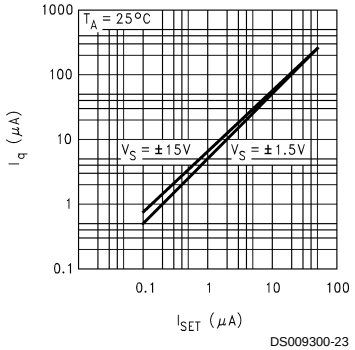

DS009300-23

Slew Rate vs I_{SET}

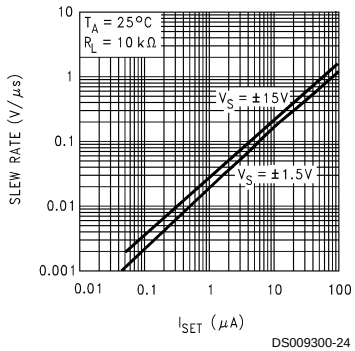

DS009300-24

Gain Bandwidth Product vs I_{SET}

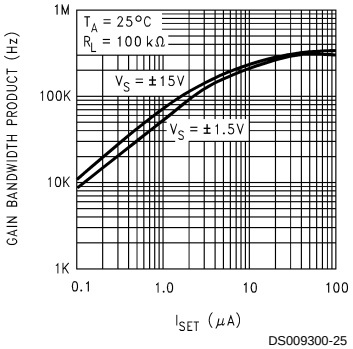

DS009300-25

Open Loop Voltage Gain vs I_{SET}

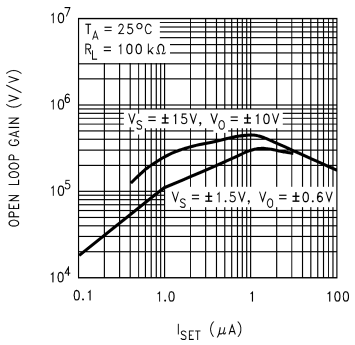

DS009300-26

Phase Margin vs I_{SET}

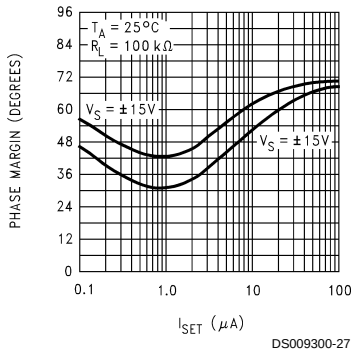

DS009300-27

Input Noise Current (I_n) and Voltage (E_n) vs Frequency

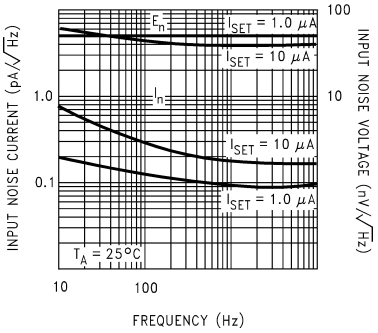

DS009300-28

R_{SET} vs I_{SET}

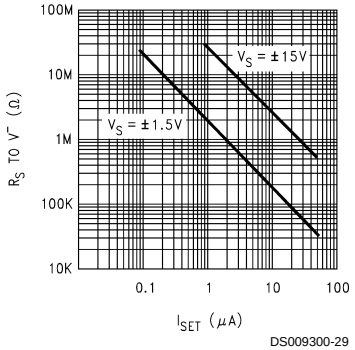

DS009300-29

Typical Applications

X5 Difference Amplifier

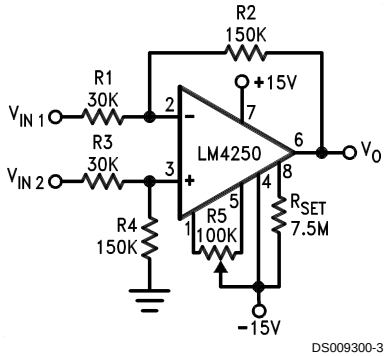

DS009300-3

Quiescent P_D = 0.6 mW

500 Nano-Watt X10 Amplifier

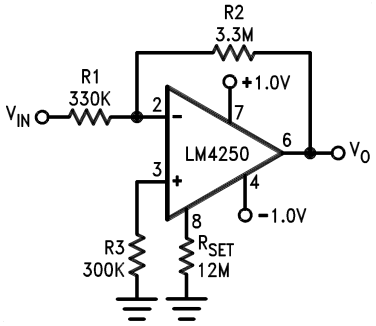

DS009300-4

Quiescent P_D = 500 nW

Floating Input Meter Amplifier
100 nA full Scale

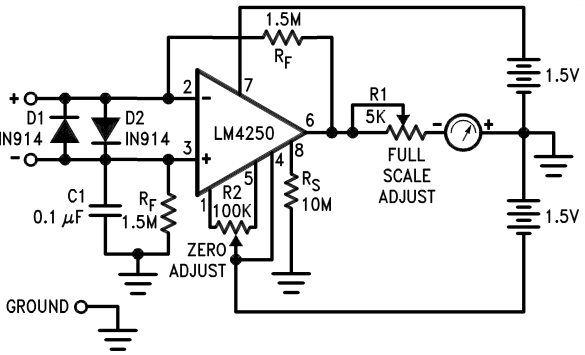

DS009300-8

Quiescent P_D = 1.8 μW
*Meter movement (0–100 μA, 2 kΩ) marked for 0–100 nA full scale.

Typical Applications (Continued)

X100 Instrumentation Amplifier 10 µW

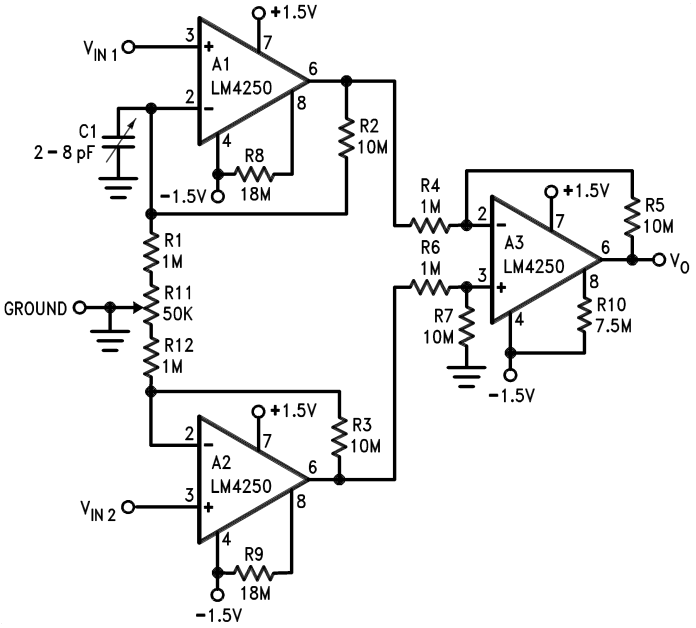

DS009300-9

Note 5: Quiescent P_D = 10 µW.

Note 6: R2, R3, R4, R5, R6 and R7 are 1% resistors.

Note 7: R11 and C1 are for DC and AC common mode rejection adjustments.

R_{SET} Connected to V^-

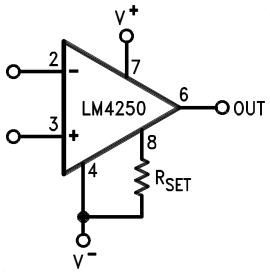

DS009300-10

R_{SET} Connected to Ground

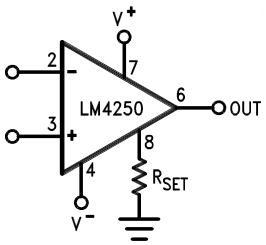

DS009300-11

I_{SET} Equations:

$$I_{SET} \approx \frac{V^+ + |V^-| - 0.5}{R_{SET}}$$ where R_{SET} is connected to V^-.

$$I_{SET} \approx \frac{V^+ - 0.5}{R_{SET}}$$ where R_{SET} is connected to ground.

DS009300-30

Transistor Current Sourcing Biasing

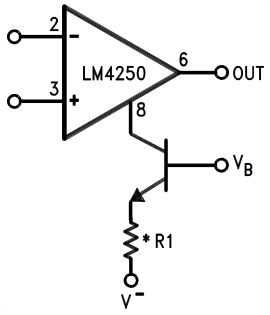

DS009300-12

FET Current Sourcing Biasing

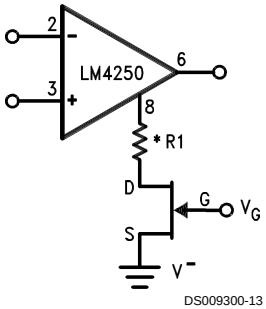

DS009300-13

Offset Null Circuit

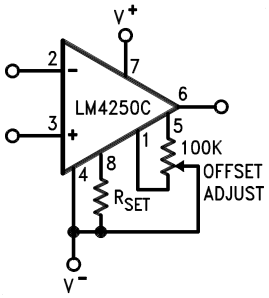

DS009300-14

*R1 limits I_{SET} maximum

Schematic Diagram

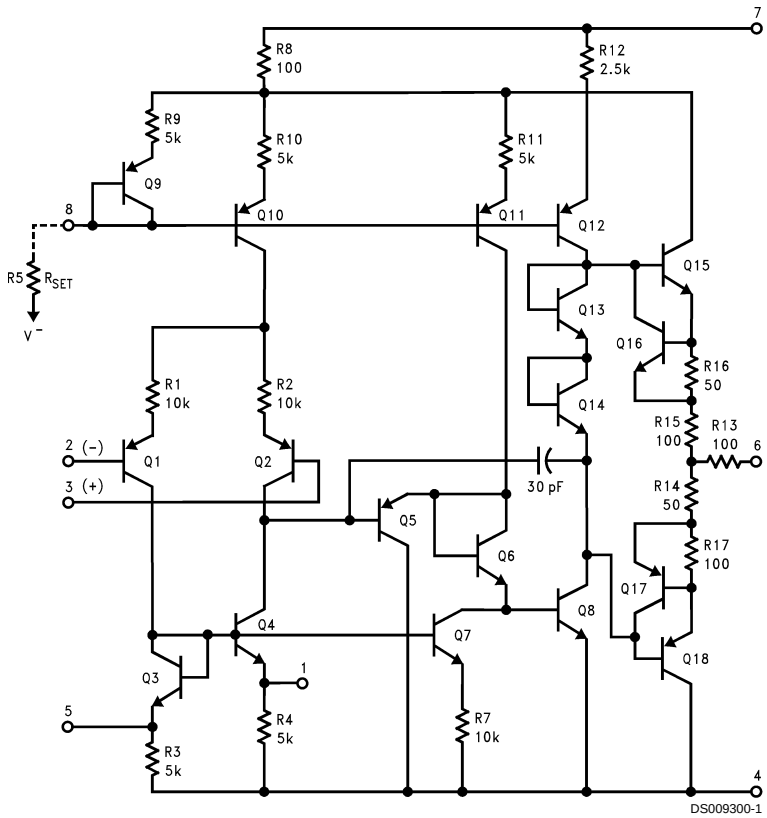

Ordering Information

Temperature Range		Package	NSC Package Number
Military $-55^{\circ}C \le T_A \le +125^{\circ}C$	**Commercial** $0^{\circ}C \le T_A \le +70^{\circ}C$		
	LM4250CN	8-Pin Molded DIP	N08E
	LM4250CM LM4250CMX	8-Pin Surface Mount	M08A
LM4250J-MIL		8-Pin Ceramic DIP	J08E
	LM4250CH	8-Pin Metal Can	H08C

Physical Dimensions inches (millimeters) unless otherwise noted

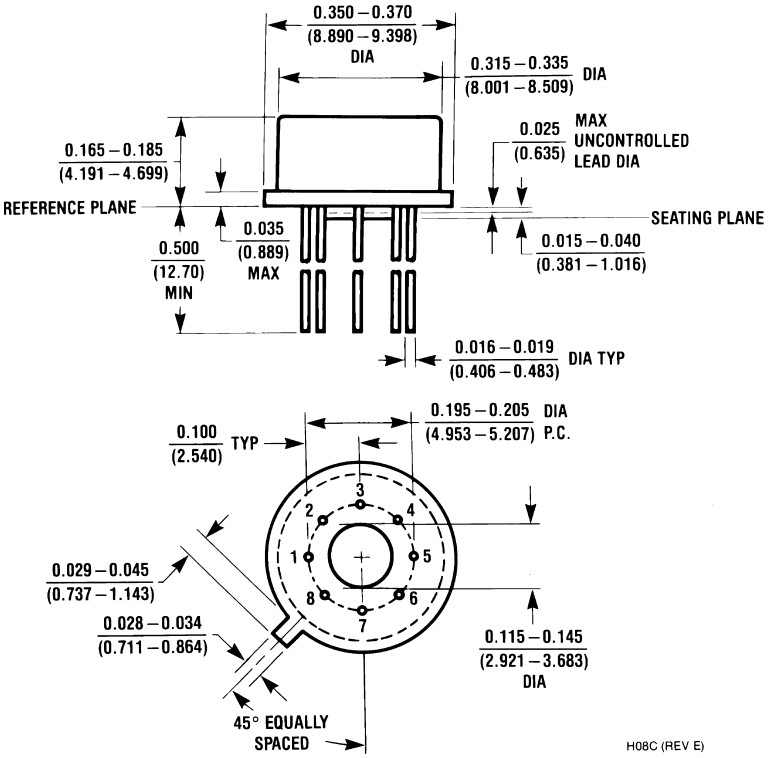

Metal Can Package (H)
Order Number LM4250CH
NS Package Number H08C

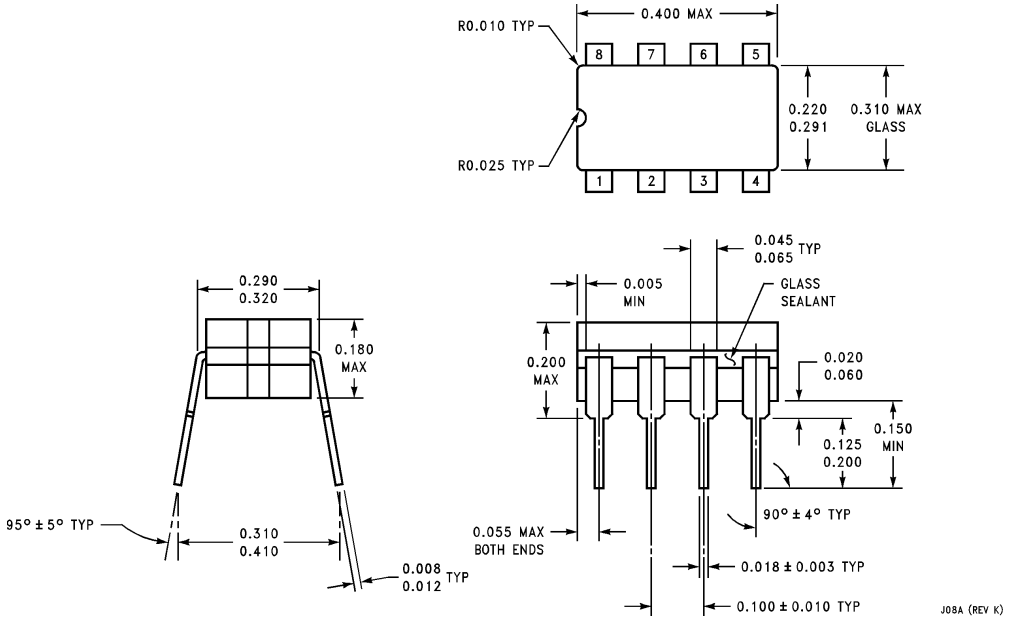

Ceramic Dual-In-Line Package (J)
Order Number LM4250J-MIL
NS Package Number J08A

Physical Dimensions inches (millimeters) unless otherwise noted (Continued)

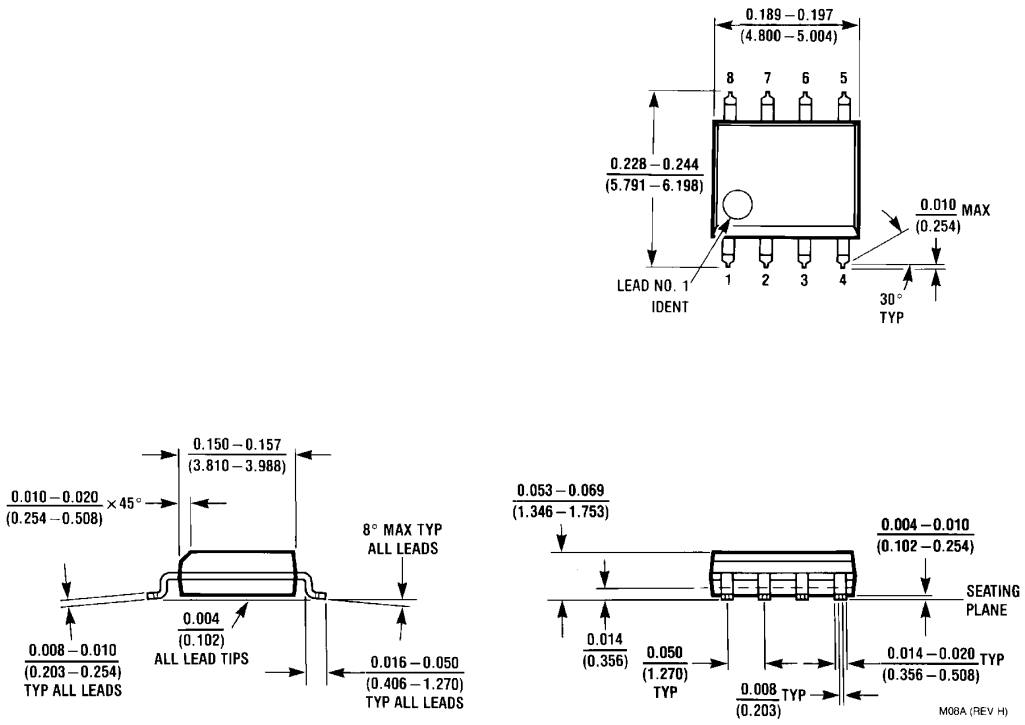

Small Outline Package (M)
Order Number LM4250CM or LM4250CMX
NS Package Number M08A

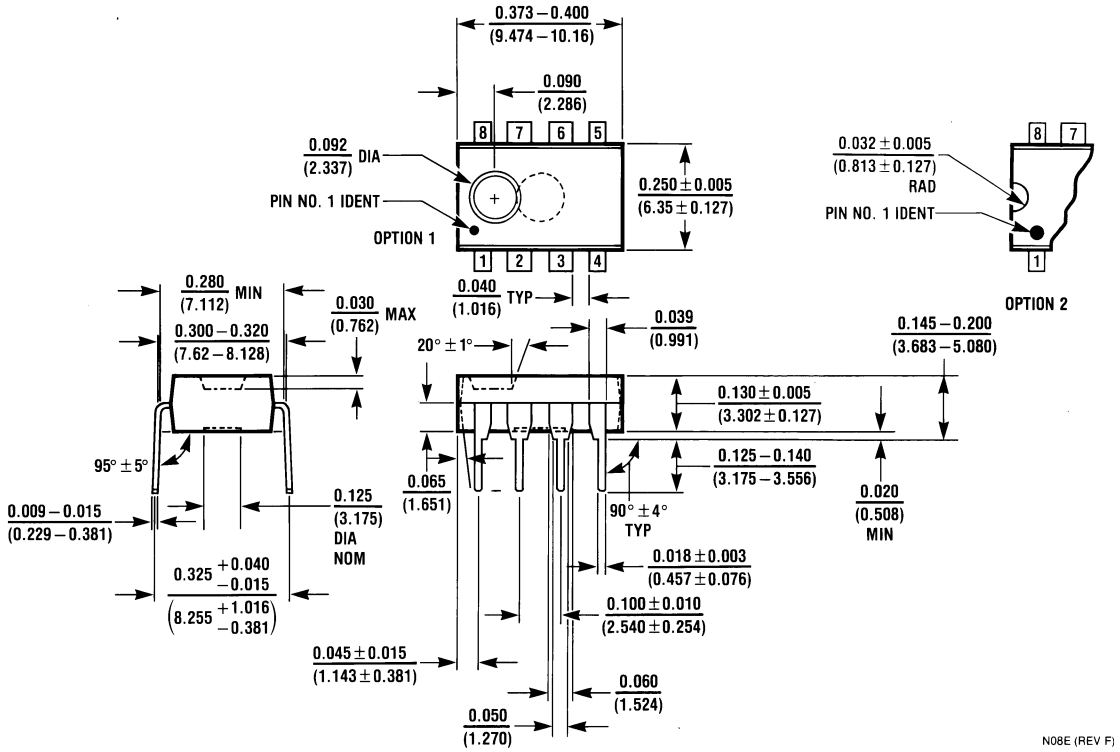

Molded Dual-In-Line Package (N)
Order Number LM4250CN
NS Package Number N08E

Notes

LIFE SUPPORT POLICY

NATIONAL'S PRODUCTS ARE NOT AUTHORIZED FOR USE AS CRITICAL COMPONENTS IN LIFE SUPPORT DEVICES OR SYSTEMS WITHOUT THE EXPRESS WRITTEN APPROVAL OF THE PRESIDENT AND GENERAL COUNSEL OF NATIONAL SEMICONDUCTOR CORPORATION. As used herein:

1. Life support devices or systems are devices or systems which, (a) are intended for surgical implant into the body, or (b) support or sustain life, and whose failure to perform when properly used in accordance with instructions for use provided in the labeling, can be reasonably expected to result in a significant injury to the user.
2. A critical component is any component of a life support device or system whose failure to perform can be reasonably expected to cause the failure of the life support device or system, or to affect its safety or effectiveness.

National Semiconductor Corporation
Americas
Tel: 1-800-272-9959
Fax: 1-800-737-7018
Email: support@nsc.com
www.national.com

National Semiconductor Europe
Fax: +49 (0) 180-530 85 86
Email: europe.support@nsc.com
Deutsch Tel: +49 (0) 69 9508 6208
English Tel: +44 (0) 870 24 0 2171
Français Tel: +33 (0) 1 41 91 8790

National Semiconductor Asia Pacific Customer Response Group
Tel: 65-2544466
Fax: 65-2504466
Email: ap.support@nsc.com

National Semiconductor Japan Ltd.
Tel: 81-3-5639-7560
Fax: 81-3-5639-7507

National does not assume any responsibility for use of any circuitry described, no circuit patent licenses are implied and National reserves the right at any time without notice to change said circuitry and specifications.

IMPORTANT NOTICE

Texas Instruments Incorporated and its subsidiaries (TI) reserve the right to make corrections, modifications, enhancements, improvements, and other changes to its products and services at any time and to discontinue any product or service without notice. Customers should obtain the latest relevant information before placing orders and should verify that such information is current and complete. All products are sold subject to TI's terms and conditions of sale supplied at the time of order acknowledgment.

TI warrants performance of its hardware products to the specifications applicable at the time of sale in accordance with TI's standard warranty. Testing and other quality control techniques are used to the extent TI deems necessary to support this warranty. Except where mandated by government requirements, testing of all parameters of each product is not necessarily performed.

TI assumes no liability for applications assistance or customer product design. Customers are responsible for their products and applications using TI components. To minimize the risks associated with customer products and applications, customers should provide adequate design and operating safeguards.

TI does not warrant or represent that any license, either express or implied, is granted under any TI patent right, copyright, mask work right, or other TI intellectual property right relating to any combination, machine, or process in which TI products or services are used. Information published by TI regarding third-party products or services does not constitute a license from TI to use such products or services or a warranty or endorsement thereof. Use of such information may require a license from a third party under the patents or other intellectual property of the third party, or a license from TI under the patents or other intellectual property of TI.

Reproduction of TI information in TI data books or data sheets is permissible only if reproduction is without alteration and is accompanied by all associated warranties, conditions, limitations, and notices. Reproduction of this information with alteration is an unfair and deceptive business practice. TI is not responsible or liable for such altered documentation. Information of third parties may be subject to additional restrictions.

Resale of TI products or services with statements different from or beyond the parameters stated by TI for that product or service voids all express and any implied warranties for the associated TI product or service and is an unfair and deceptive business practice. TI is not responsible or liable for any such statements.

TI products are not authorized for use in safety-critical applications (such as life support) where a failure of the TI product would reasonably be expected to cause severe personal injury or death, unless officers of the parties have executed an agreement specifically governing such use. Buyers represent that they have all necessary expertise in the safety and regulatory ramifications of their applications, and acknowledge and agree that they are solely responsible for all legal, regulatory and safety-related requirements concerning their products and any use of TI products in such safety-critical applications, notwithstanding any applications-related information or support that may be provided by TI. Further, Buyers must fully indemnify TI and its representatives against any damages arising out of the use of TI products in such safety-critical applications.

TI products are neither designed nor intended for use in military/aerospace applications or environments unless the TI products are specifically designated by TI as military-grade or "enhanced plastic." Only products designated by TI as military-grade meet military specifications. Buyers acknowledge and agree that any such use of TI products which TI has not designated as military-grade is solely at the Buyer's risk, and that they are solely responsible for compliance with all legal and regulatory requirements in connection with such use.

TI products are neither designed nor intended for use in automotive applications or environments unless the specific TI products are designated by TI as compliant with ISO/TS 16949 requirements. Buyers acknowledge and agree that, if they use any non-designated products in automotive applications, TI will not be responsible for any failure to meet such requirements.

Following are URLs where you can obtain information on other Texas Instruments products and application solutions:

Products		**Applications**	
Audio	www.ti.com/audio	Communications and Telecom	www.ti.com/communications
Amplifiers	amplifier.ti.com	Computers and Peripherals	www.ti.com/computers
Data Converters	dataconverter.ti.com	Consumer Electronics	www.ti.com/consumer-apps
DLP® Products	www.dlp.com	Energy and Lighting	www.ti.com/energy
DSP	dsp.ti.com	Industrial	www.ti.com/industrial
Clocks and Timers	www.ti.com/clocks	Medical	www.ti.com/medical
Interface	interface.ti.com	Security	www.ti.com/security
Logic	logic.ti.com	Space, Avionics and Defense	www.ti.com/space-avionics-defense
Power Mgmt	power.ti.com	Transportation and Automotive	www.ti.com/automotive
Microcontrollers	microcontroller.ti.com	Video and Imaging	www.ti.com/video
RFID	www.ti-rfid.com		
OMAP Mobile Processors	www.ti.com/omap		
Wireless Connectivity	www.ti.com/wirelessconnectivity		
	TI E2E Community Home Page		e2e.ti.com

Mailing Address: Texas Instruments, Post Office Box 655303, Dallas, Texas 75265
Copyright © 2011, Texas Instruments Incorporated