DONGGUAN NANJING ELECTRONICS LTD.,

TO-92 Plastic-Encapsulate Transistors

2SC3199 TRANSISTOR (NPN)

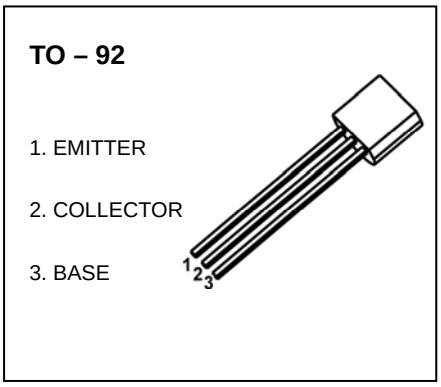

FEATURES

- High Current Capability
- High DC Current Gain
- Small Package

APPLICATIONS

- Audio Amplifier Applications
- AM Amplifier Applications

MARKING

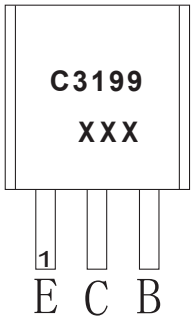

C3199=Device code

XXX=Code

Equivalent Circuit

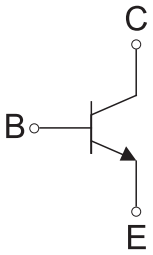

ORDERING INFORMATION

Part Number	Package	Packing Method	Pack Quantity
2SC3199	TO-92	Bulk	1000pcs/Bag
2SC3199-TA	TO-92	Tape	2000pcs/Box

MAXIMUM RATINGS (T_a=25℃ unless otherwise noted)

Symbol	Parameter	Value	Unit
V_{CBO}	Collector-Base Voltage	50	V
V_{CEO}	Collector-Emitter Voltage	50	V
V_{EBO}	Emitter-Base Voltage	5	V
I_C	Collector Current	0.15	A
P_C	Collector Power Dissipation	400	mW
$R_{\theta JA}$	Thermal Resistance From Junction To Ambient	312	℃/W
T_J,T_{stg}	Operation Junction and Storage Temperature Range	-55~+150	℃

Download from alldatasheet.com

ELECTRICAL CHARACTERISTICS

T_a=25℃ unless otherwise specified

Parameter	Symbol	Test conditions	Min	Typ	Max	Unit
Collector-base breakdown voltage	$V_{(BR)CBO}$	I_C= 0.1mA,I_E=0	50			V
Collector-emitter breakdown voltage	$V_{(BR)CEO}$	I_C=1mA,I_B=0	50			V
Emitter-base breakdown voltage	$V_{(BR)EBO}$	I_E=0.1mA,I_C=0	5			V
Collector cut-off current	I_{CBO}	V_{CB}=50V,I_E=0			0.1	μA
Emitter cut-off current	I_{EBO}	V_{EB}=5V,I_C=0			0.1	μA
DC current gain	h_{FE}	V_{CE}=6V, I_C=2mA	70		700	
Collector-emitter saturation voltage	$V_{CE(sat)}$	I_C=100mA,I_B=10mA			0.25	V
Collector output capacitance	C_{ob}	V_{CB}=10V,I_E=0, f=1MHz			3.5	pF
Transition frequency	f_T	V_{CE}=10V,I_C=1mA	80			MHz

CLASSIFICATION OF h_{FE}

RANK	O	Y	GR	BL
RANGE	70-140	120-240	200-400	300-700

Download from alldatasheet.com

TO-92 Package Outline Dimensions

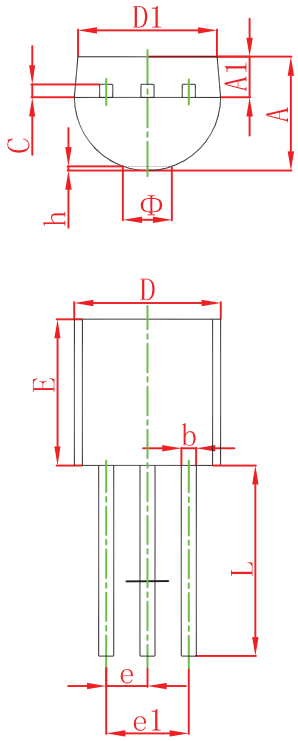

Symbol	Dimensions In Millimeters		Dimensions In Inches	
	Min	Max	Min	Max
A	3.300	3.700	0.130	0.146
A1	1.100	1.400	0.043	0.055
b	0.380	0.550	0.015	0.022
c	0.360	0.510	0.014	0.020
D	4.300	4.700	0.169	0.185
D1	3.430		0.135	
E	4.300	4.700	0.169	0.185
e	1.270 TYP		0.050 TYP	
e1	2.440	2.640	0.096	0.104
L	14.100	14.500	0.555	0.571
Φ		1.600		0.063
h	0.000	0.380	0.000	0.015

TO-92 Suggested Pad Layout

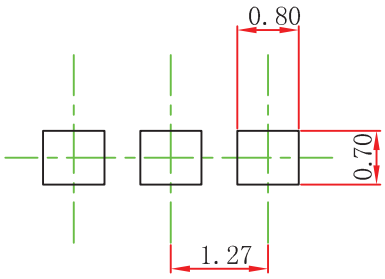

Note:
1.Controlling dimension:in millimeters.
2.General tolerance:± 0.05mm.
3.The pad layout is for reference purposes only.

Download from alldatasheet.com

TO-92 Tape and Reel

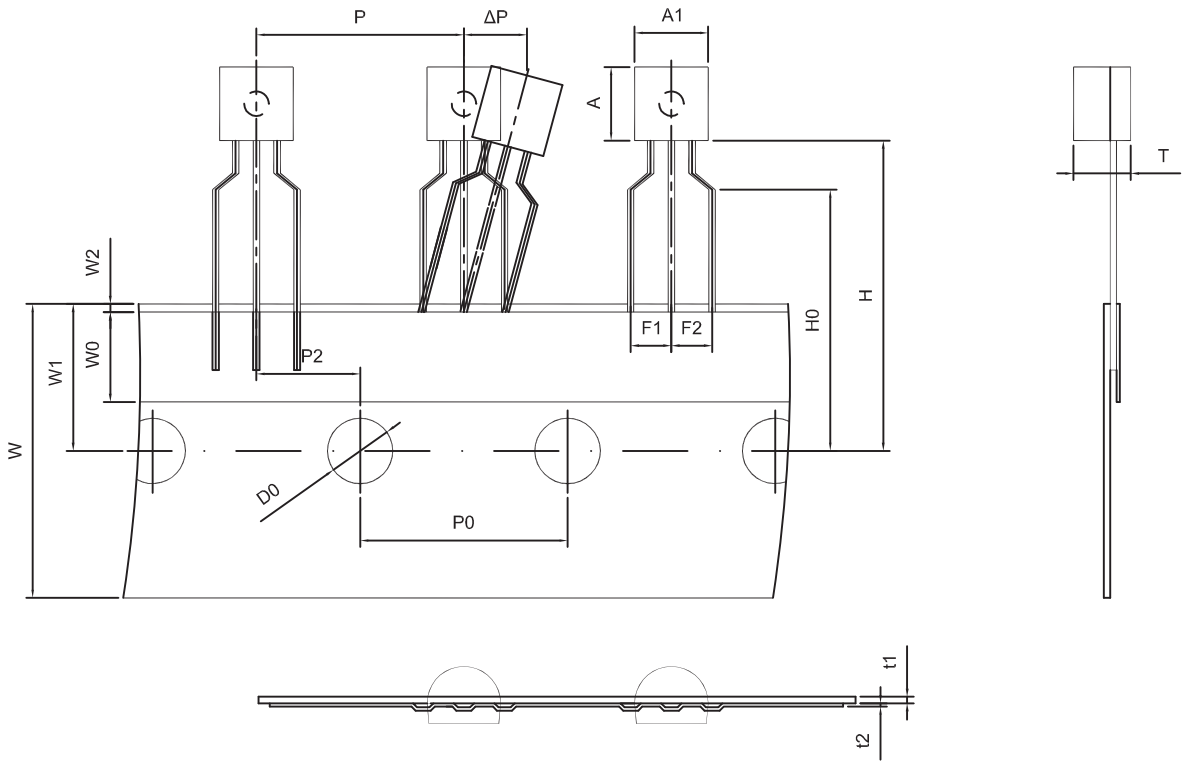

Dimiensions are in millimeter								
A1	A	T	P	P0	P2	F1	F2	W
4.5	4.5	3.5	12.7	12.7	6.35	2.5	2.5	18.0
W0	W1	W2	H	H0	D0	t1	t2	ΔP
6.0	9.0	1.0 MAX.	19.0	16.0	4.0	0.4	0.2	0

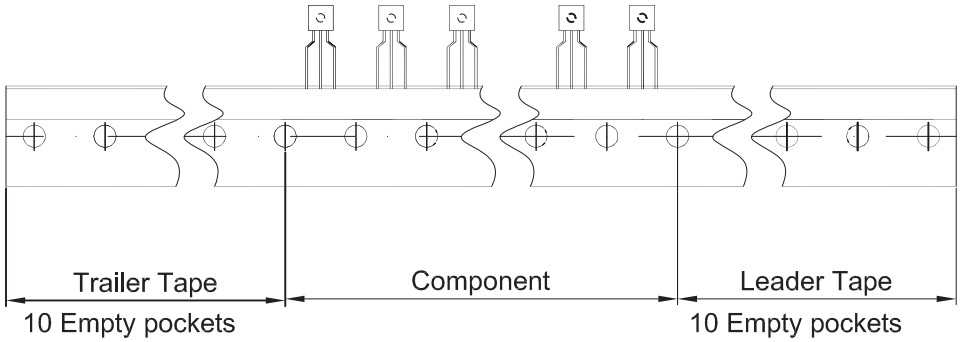

Package	Box	Box Size(mm)	Carton	Carton Size(mm)
TO-92	2000 pcs	333×162×43	20,000 pcs	350×340×250

Download from alldatasheet.com