MRD3050 (SILICON)
thru
MRD3056

NPN SILICON PHOTO TRANSISTOR

. . . designed for application in industrial inspection, processing and control, counters, sorters, switching and logic circuits or any design requiring radiation sensitivity, and stable characteristics.

- Hermetic Package at Economy Prices
- Popular TO-18 Type Package for Easy Handling and Mounting
- Sensitive Throughout Visible and Near Infrared Spectral Range for Wider Application
- Range of Radiation Sensitivities for Design Flexibility
- External Base for Added Control
- Annular Passivated Structure for Stability and Reliability

30 VOLT
NPN SILICON
PHOTO TRANSISTOR
400 MILLIWATTS

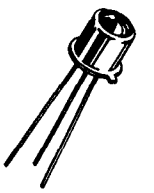

MAXIMUM RATINGS (T_A = 25°C unless otherwise noted)

Rating	Symbol	Value	Unit
Collector-Emitter Voltage	V_{CEO}	30	Volts
Emitter-Collector Voltage	V_{ECO}	5.0	Volts
Collector-Base Voltage	V_{CBO}	40	Volts
Total Device Dissipation @ T_A = 25°C Derate above 25°C	P_D	400 2.28	mW mW/°C
Operating and Storage Junction Temperature Range	T_J,T_{stg}	-65 to +200	°C

THERMAL CHARACTERISTICS

Characteristic	Symbol	Max	Unit
Thermal Resistance, Junction to Ambient	θ_{JA}	438	°C/W

FIGURE 1 – COLLECTOR-EMITTER SENSITIVITY

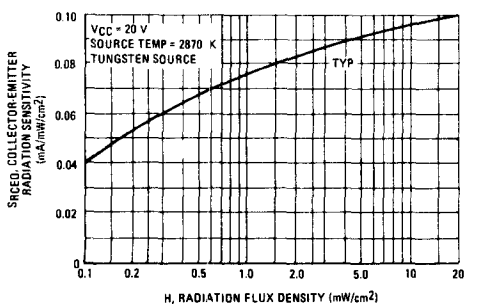

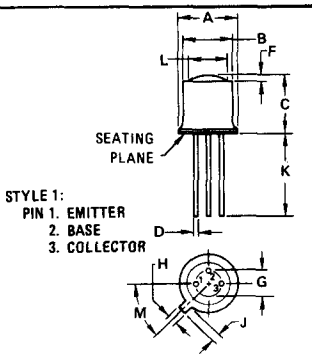

STYLE 1:
PIN 1. EMITTER
2. BASE
3. COLLECTOR

NOTES:
1. LEADS WITHIN .13 mm (.005) RADIUS OF TRUE POSITION AT SEATING PLANE, AT MAXIMUM MATERIAL CONDITION.
2. PIN 3 INTERNALLY CONNECTED TO CASE.

DIM	MILLIMETERS		INCHES	
	MIN	MAX	MIN	MAX
A	5.31	5.84	0.209	0.230
B	4.52	4.95	0.178	0.195
C	5.08	6.35	0.200	0.250
D	0.41	0.48	0.016	0.019
F	0.51	1.02	0.020	0.040
G	2.54 BSC		0.100 BSC	
H	0.99	1.17	0.039	0.046
J	0.84	1.22	0.033	0.048
K	12.70	–	0.500	–
L	3.35	4.01	0.132	0.158
M	45° BSC		45° BSC	

CASE 82-01

STATIC ELECTRICAL CHARACTERISTICS (T_A = 25°C unless otherwise noted)

Characteristic	Symbol	Min	Typ	Max	Unit
Collector Dark Current (V_{CC} = 20 V, R_L = 1.0 Megohm, Note 2) T_A = 25°C T_A = 85°C	I_{CEO}	 – –	 – 5.0	 0.1 –	μA
Collector-Base Breakdown Voltage (I_C = 100 μA)	BV_{CBO}	40	–	–	Volts
Collector-Emitter Breakdown Voltage (I_C = 100 μA)	BV_{CEO}	30	–	–	Volts
Emitter-Collector Breakdown Voltage (I_E = 100 μA)	BV_{ECO}	5.0	–	–	Volts

OPTICAL CHARACTERISTICS (T_A = 25°C unless otherwise noted)

Characteristic		Fig. No.	Symbol	Min	Typ	Max	Unit
Collector Light Current		1	I_L				mA
(V_{CC} = 20 V, R_L = 100 ohms, Note 1)	MRD3050			0.10	–	–	
	MRD3051			0.20	–	–	
	MRD3052			0.10	–	0.40	
	MRD3053			0.25	–	1.0	
	MRD3054			0.625	–	2.5	
	MRD3055			1.5	–	–	
	MRD3056			2.0	–	–	
Photo Current Saturated Rise Time (Note 3)		4	$t_{r(sat)}$	–	1.0	–	μs
Photo Current Saturated Fall Time (Note 3)		4	$t_{f(sat)}$	–	10	–	μs
Photo Current Rise Time (Note 4)		4	t_r	–	2.0	–	μs
Photo Current Fall Time (Note 4)		4	t_f	–	3.5	–	μs
Wavelength of Maximum Sensitivity		–	λ_s	–	0.8	–	μm

NOTES:

1. Radiation flux density (H) equal to 5.0 mW/cm^2 emitted from a tungsten source at a color temperature of 2870 K.
2. Measured under dark conditions. ($H \approx 0$).
3. For saturated switching time measurements, radiation is provided by a pulsed xenon arc lamp with a pulse width of approximately 1.0 microsecond (see Figure 4).
4. For unsaturated switching time measurements, radiation is provided by a pulsed GaAs (gallium-arsenide) light-emitting diode ($\lambda \approx 0.9$ μm) with a pulse width equal to or greater than 10 microseconds (see Figure 4).

TYPICAL ELECTRICAL CHARACTERISTICS

FIGURE 2 – COLLECTOR-EMITTER CHARACTERISTICS

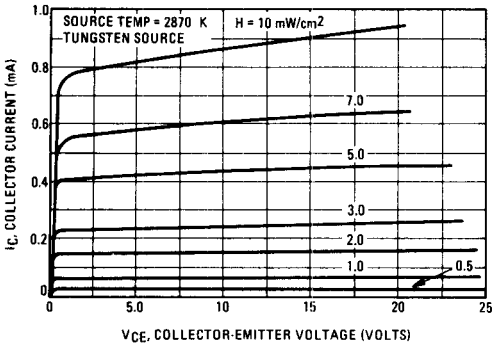

FIGURE 3 – PHOTO CURRENT versus TEMPERATURE

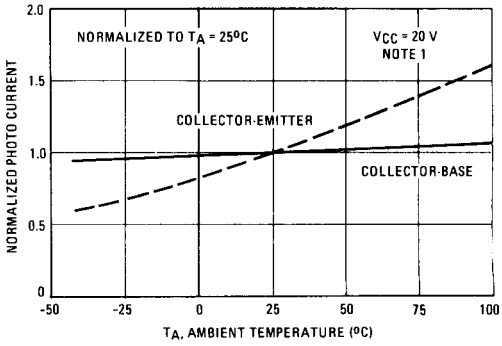

FIGURE 4 – PULSE RESPONSE TEST CIRCUIT AND WAVEFORM

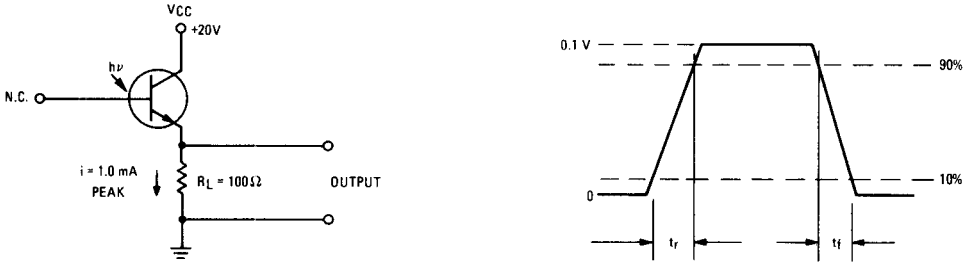

FIGURE 5 – DARK CURRENT versus TEMPERATURE

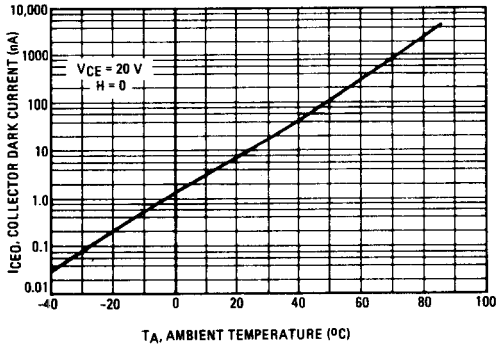

TYPICAL CIRCUIT APPLICATIONS

(Extracted from Motorola Applications Note AN-508, "Applications of Phototransistors in Electro-Optic Systems")

FIGURE 6 – STROBEFLASH SLAVE ADAPTER

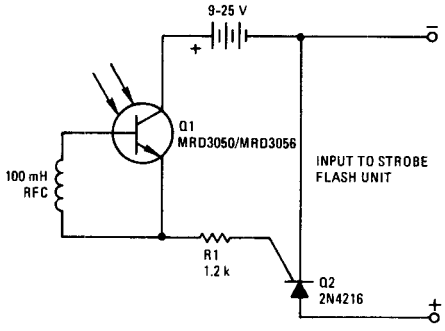

FIGURE 7 – LIGHT OPERATED SCR ALARM USING SENSITIVE-GATE SCR

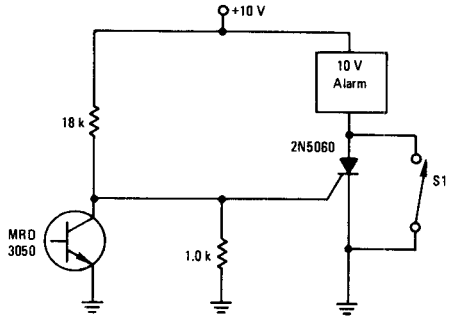

FIGURE 8 – CIRCUIT DIAGRAM OF VOLTAGE REGULATOR FOR PROJECTION LAMP.

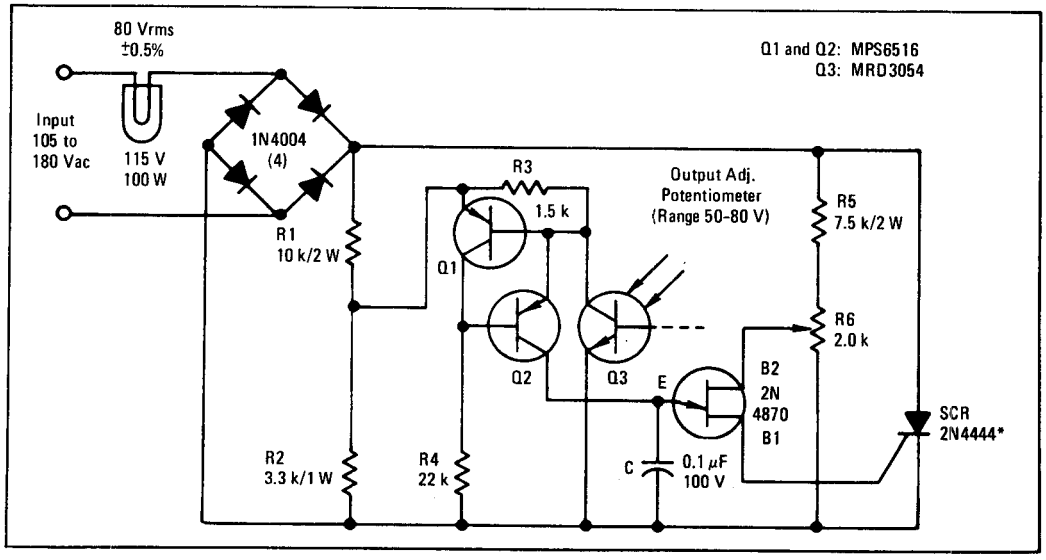

*2N4444 to be used with a heat sink.