8,192 WORD × 8 BIT CMOS STATIC RAM

TC5564APL-15,TC5564APL-20
TC5564AFL-15,TC5564AFL-20

PRELIMINARY

DESCRIPTION

TC5564APL is 65536 bits static random access memory organized as 8192 words by 8 bits using CMOS technology, and operates with a single 5V power supply.

Advanced circuit techniques provides low power feature with a maximum operating of 5mA/MHz. Operation current depends on cycle time.

TC5564APL has three control inputs. Two chip enables ($\overline{CE1}$, CE2) allow for device selection and data retention control. Output enable ($\overline{OE}$) input provides fast memory access. When device is placed in standby mode with chip off state, standby current is typically 0.01μA. So the TC5564APL is suitable for use in various microprocessor application systems where low power and battery back up are required. Ultra low standby power allow not only battery but capacitance backup.

Pin assignment of TC5564APL is pin-compatible with the 64K bits EPROM (TMM2764D). RAM and EPROM are then interchangeable in the same socket, resulting in flexibility in the definition of the quantity of RAM versus EPROM in microprocessor application systems.

TC5564APL is offered in both a standard dual-in-line 28 pin plastic package (0.6 inch width) and small-out-line plastic flat package.

FEATURES

- Low Power Dissipation
  5mA/MHz (MAX.) Operating
  0.2μA (MAX.) at Ta=25°C Standby
  1.0μA (MAX.) at Ta=60°C Standby
- 5V Single Power Supply
- Fully Static Operation
- Data Retention Voltage : 2.0~5.5V
- Plastic DIP and Plastic Flat Package
- Pin Compatible with 2764 type EPROM
- Access Time

	TC5564APL-15 TC5564AFL-15	TC5564APL-20 TC5564AFL-20
Address Access Time (MAX.)	150ns	200ns
$\overline{CE1}$ Access Time (MAX.)	150ns	200ns
CE2 Access Time (MAX.)	150ns	200ns
$\overline{OE}$ Access Time (MAX.)	70ns	100ns

- Directly TTL Compatible : All Inputs and Outputs
- Wide Temperature Operation : −40~85°C

PIN CONNECTION (TOP VIEW)

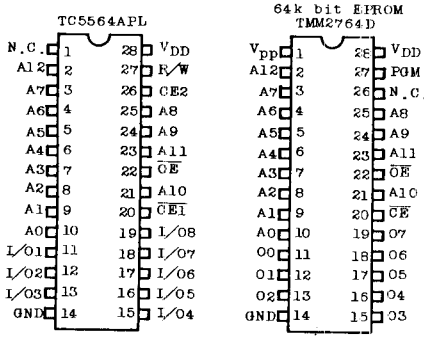

BLOCK DIAGRAM

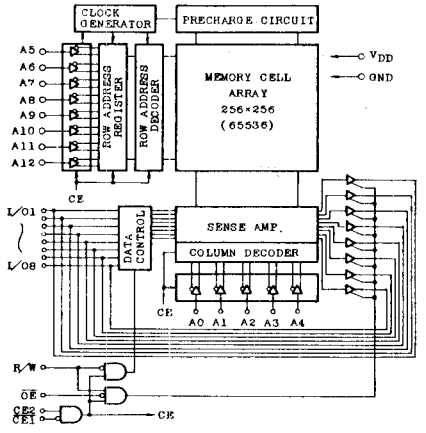

PIN NAMES

$A_0 \sim A_{12}$	Address Inputs
R/W	Read/Write Control Input
$\overline{OE}$	Output Enable Input
$\overline{CE1}$, CE2	Chip Enable Inputs
I/O1 ~ I/O8	Data Input/Output
V_{DD}	Power (+5V)
GND	Ground
N. C.	No Connection

OPERATING MODE

Operation Mode	$\overline{CE1}$	CE2	$\overline{OE}$	R/W	I/O1 ~ I/O8	Power
Read	L	H	L	H	D_{OUT}	I_{DDO}
Write	L	H	*	L	D_{IN}	
Output Deselect	*	*	H	*	High-Z	
Standby	H	*	*	*	〃	I_{DDS}
	*	L	*	*	〃	I_{DDS}

MAXIMUM RATINGS

SYMBOL	ITEM	RATING	UNIT
*V_{DD}	Power Supply Voltage	−0.3 ~ 7.0	V
V_{IN}	Input Voltage	−0.3** ~ V_{DD}	V
$V_{I/O}$	Input and Output Voltage	−0.5 ~ V_{DD} + 0.5	V
P_D	Power Dissipation	1.0(0.6)***	W
T_{solder}	Soldering Temperature	260·10	°C·sec
T_{stg}	Storage Temperature	−55 ~ 150	°C
T_{opr}	Operating Temperature	−40 ~ 85	°C

* 8.5V at 100ns.
** −3.0V Pulse width 50ns
*** SOP

D.C. RECOMMENDED OPERATING CONDITIONS (Ta = −40 ~ 85°C)

SYMBOL	PARAMETER	MIN.	TYP	MAX.	UNIT
V_{DD}	Power Supply Voltage	4.5	5.0	5.5	V
V_{IH}	Input High Voltage	2.2	—	V_{DD} + 0.3	V
V_{IL}	Input Low Voltage	−0.3*	—	0.8	V
V_{DH}	Data Retention Supply Voltage	2.0	—	5.5	V

* −3.0V Pulse width 50ns

D. C and OPERATING CHARACTERISTICS (Ta = −40 ~ 85°C, V_{DD} = 5V ± 10% Unless other wise noted)

SYMBOL	PARAMETER	CONDITIONS	MIN.	TYP.	MAX.	UNIT
I_{IN}	Input Leakage Current	V_{IN} = 0 ~ V_{DD}	—	—	±1.0	μA
I_{OH}	Output High Current	V_{OH} = 2.4V	−1.0	—	—	mA
I_{OL}	Output Low Current	V_{OL} = 0.4V	4.0	—	—	mA
V_{OH}	Output High Voltage	I_{OH} = −20μA	V_{DD} − 0.1	—	—	V
V_{OL}	Output Low Voltage	I_{OL} = 20μA	—	—	0.1	V
I_{LO}	Output Leakage Current	$\overline{CE1}$ = V_{IH} or CE2 = V_{IL} or R/W = V_{IL} or $\overline{OE}$ = V_{IH}, V_{OUT} = 0 ~ V_{DD}	—	—	±1.0	μA

SYMBOL	PARAMETER	CONDITIONS			MIN.	TYP.	MAX.	UNIT
I_{DDO1}	Operating Current	$\overline{CE1}=V_{IL}$ and CE2 = V_{IH} Other Input = V_{IH}/V_{IL} I_{OUT} = 0mA	$t_{cycle}=1\mu s$		—	—	10	mA
			MIN CYCLE	TC5564APL-15 TC5564AFL-15	—	—	40	
				TC5564APL-20 TC5564AFL-20	—	—	35	
I_{DDO2}	Operating Current	$\overline{CE1}=0.2V$ and CE2 = $V_{DD}-0.2V$, Other Input = $V_{DD}-0.2V/0.2V$ I_{OUT} = 0mA duty 100%	$t_{cycle}=1\mu s$		—	—	5	mA
			MIN CYCLE	TC5564APL-15 TC5564AFL-15	—	—	35	
				TC5564APL-20 TC5564AFL-20	—	—	30	
I_{DDS1}	Standby Current	$\overline{CE1}=V_{IH}$ or CE2 = V_{IL}			—	—	2	mA
I_{DDS2}	Standby Current	$\overline{CE_1}=V_{DD}-0.2V$ or CE2 = 0.2V V_{DD} = 2.0~5.5V		Ta = 25°C	—	0.01	0.2	μA
				Ta = 60°C	—	—	1.0	

Note : (1) In standby mode with $\overline{CE1} \geqq V_{DD}-0.2V$, these specification limits are guaranteed under the condition of $CE2 \geqq V_{DD}-0.2V$ or $CE2 \leqq 0.2V$.
(2) All voltage is measured from GND.

CAPACITANCE (Ta = 25°C, f = 1MHz)

SYMBOL	PARAMETER	CONDITIONS	MAX.	UNIT
C_{IN}	Input Capacitance	V_{IN} = GND	10	pF
C_{OUT}	Output Capacitance	V_{OUT} = GND	10	pF

Note : This parameter is periodically sampled and is not 100% tested.

A. C. CHARACTERISTICS

READ CYCLE

SYMBOL	PARAMETER	TC5564APL-15 TC5564AFL-15		TC5564APL-20 TC5564AFL-20		UNIT
		MIN.	MAX.	MIN.	MAX.	
t_{RC}	Read Cycle Time	150	—	200	—	ns
t_{ACC}	Address Access Time	—	150	—	200	
t_{CO1}	$\overline{CE1}$ Access Time	—	150	—	200	
t_{CO2}	CE2 Access Time	—	150	—	200	
t_{OE}	Output Enable to Output in Valid	—	70	—	100	
t_{COE}	Chip Enable to ($\overline{CE1}$, CE2) Output in Low-Z	10	—	10	—	
t_{OEE}	Output Enable to Output Low-Z	5	—	5	—	
t_{OD}	Chip Enable ($\overline{CE1}$, CE2) Output in High-Z	—	70	—	100	
t_{ODO}	Output Enable to Output High-Z	—	60	—	80	
t_{OH}	Output Data Hold Time	20	—	20	—	

WRITE CYCLE

SYMBOL	PARAMETER	TC5564APL-15 TC5564AFL-15		TC5564APL-20 TC5564AFL-20		UNIT
		MIN.	MAX.	MIN.	MAX.	
t_{WC}	Write Cycle Time	150	—	200	—	ns
t_{WP}	Write Pulse Width	100	—	150	—	
t_{CW}	Chip Selection to End of Write	120	—	180	—	
t_{AS}	Address Set up Time	0	—	0	—	
t_{WR}	Write Recovery Time	0	—	0	—	
t_{ODW}	R/W to Output High-Z	—	70	—	100	
t_{OEW}	R/W to Output Low-Z	10	—	10	—	
t_{DS}	Data Set Up Time	60	—	80	—	
t_{DH}	Data Hold Time	0	—	0	—	

A.C. TEST CONDITIONS

- Input Pulse Levels : 2.4V/0.6V
- Timing Measurement Reference Levels : 2.2V/0.8V
- Output Reference Levels : 2.2V/0.8V
- Input Pulse Rise and Fall Times : 5ns
- Output Load : See Fig. 1

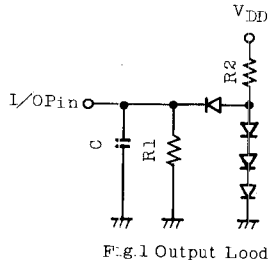

Fig. 1 Output Load

TIMING WAVEFORMS

READ CYCLE (1)

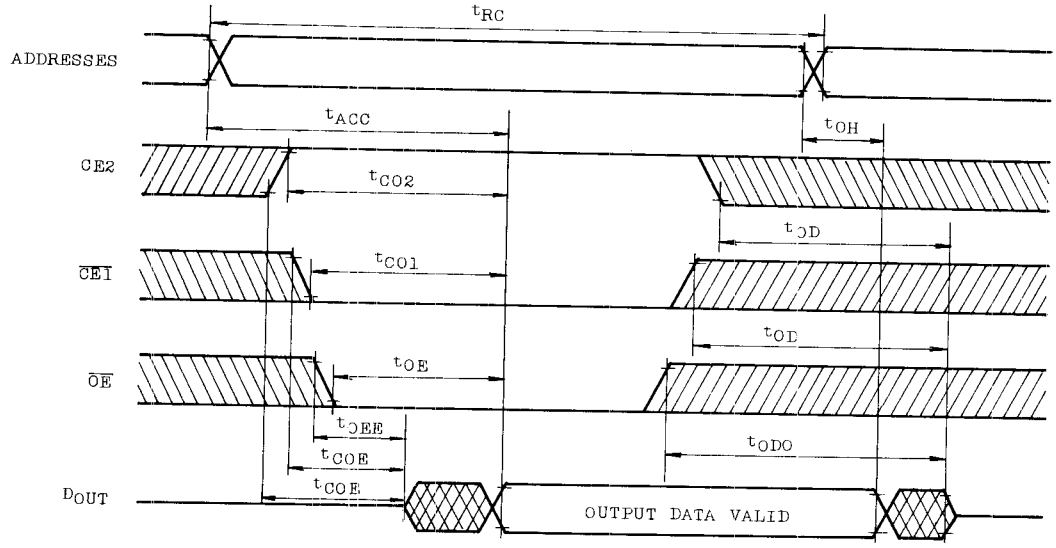

WRITE CYCLE (R/W Controlled Write)

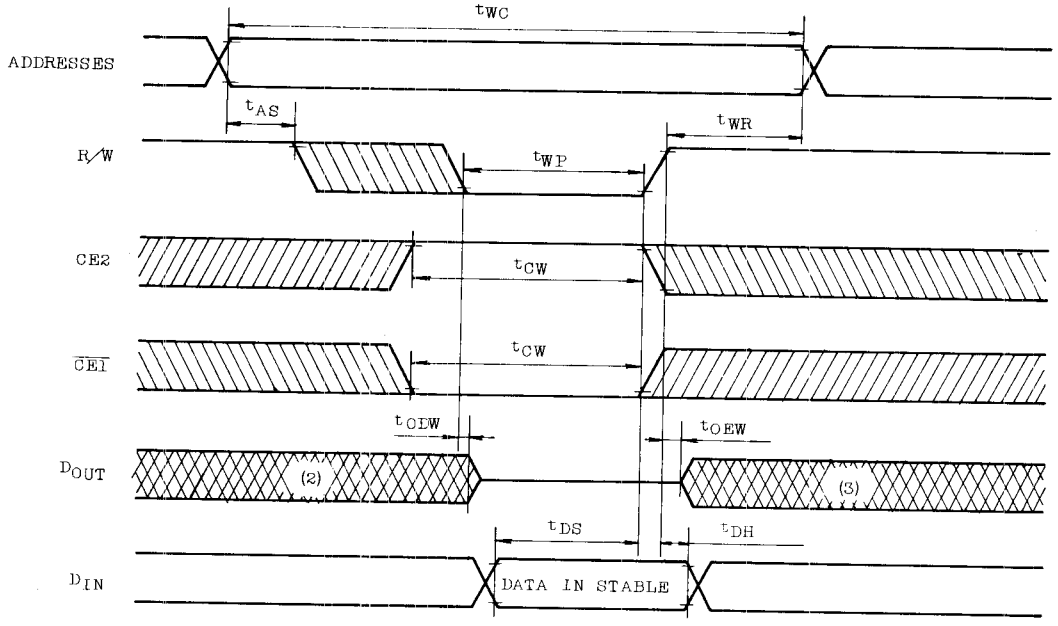

WRITE CYCLE 2 (4) ($\overline{CE1}$ Controlled Write)

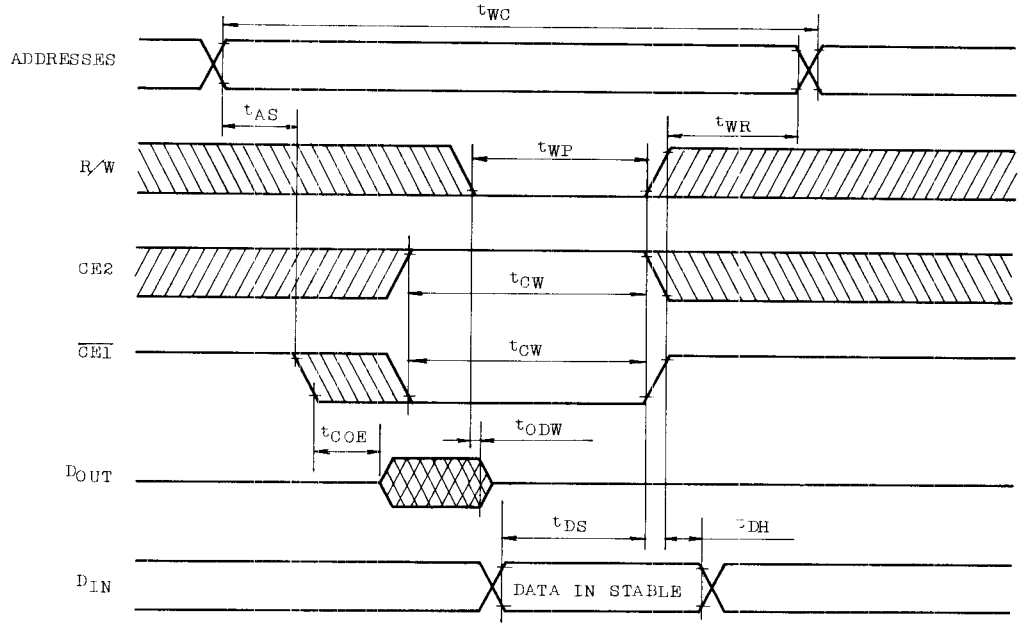

WRITE CYCLE 3 (4) (CE2 Controlled Write)

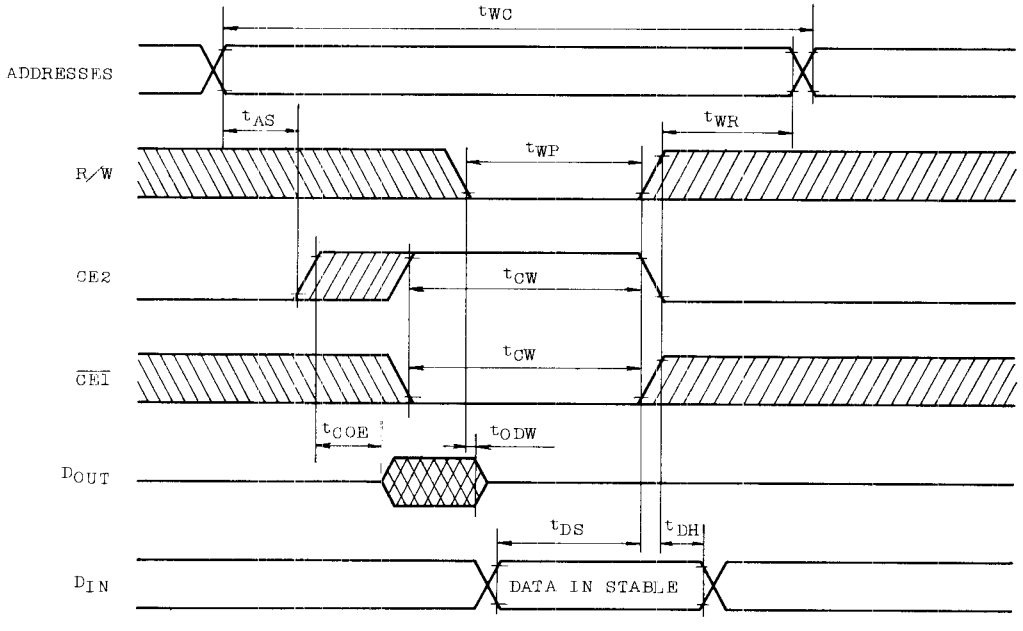

Note : (1) R/W is High for Read Cycle. (2) Assuming that $\overline{CE1}$ Low transition or CE2 High transition occurs coincident with or after R/W low transition, Outputs remain in a high impedance state. (3) Assuming that $\overline{CE1}$ High transition or CE2 Low transition occurs coincident with or prior to R/W High transition, outputs remain in a high impedance state. (4) Assuming that $\overline{OE}$ is High for Write Cycle, Outputs are in high impedance state during this period.

DATA RETENTION CHARACTERISTICS (Ta = −40~85°C)

SYMBOL	PARAMETER		MIN.	TYP.	MAX.	UNIT
V_{DH}	Data Retention Supply Voltage		2.0	—	5.5	V
I_{DDS2}	Standby Current	Ta = 25°C	—	0.01	0.2	μA
		Ta = 60°C	—	—	1.0	
t_{CDR}	Chip Deselection to Data Retention Mode		0	—	—	μs
t_R	Recovery Time		t_{RC}(1)	—	—	μs

$\overline{CE1}$ Controlled Data Retention Mode (2)

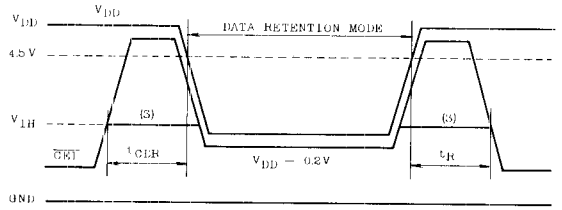

CE2 Controlled Data Retention Mode (4)

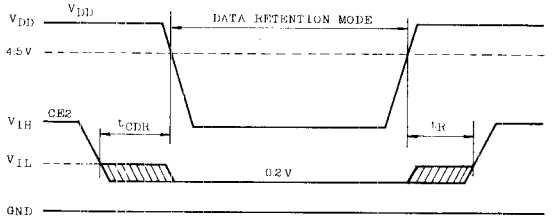

Note : (1) T_{RC} : Read Cycle Time (2) In $\overline{CE1}$ controlled data retention mode, minimum standby current mode is achieved under the condition of CE2 ≦ 0.2V or CE2 ≧ V_{DD} − 02V. (3) If the V_{IH} of $\overline{CE1}$ is 2.2V in operation, during the period that the V_{DD} Voltage is going down from 4.5 to 2.4V, I_{DDS1} current flows. (4) In CE2 controlled data retention mode, minimum standby current mode is achieved under the condition of CE2 ≦ 0.2V.

DEVICE INFORMATION

The TC5564APL is an asynchronous RAM using address activated circuit technology, thus the internal operation is synchronous. Then once row address change occur, the precharge operation executed by internal pulse generated from row address transient. Therefore the peak current flows after only row address change, as is shown in the following figure.

This peak current may induce the noise on V_{DD}/GND line. Thus the use of about 0.1μF decoupling capacitor every device is recommended to eliminate such noise.

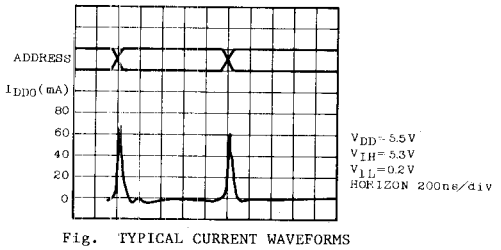

Fig. TYPICAL CURRENT WAVEFORMS

DIP 28 PIN OUTLINE DRAWING (6D28A-P)

Unit in mm

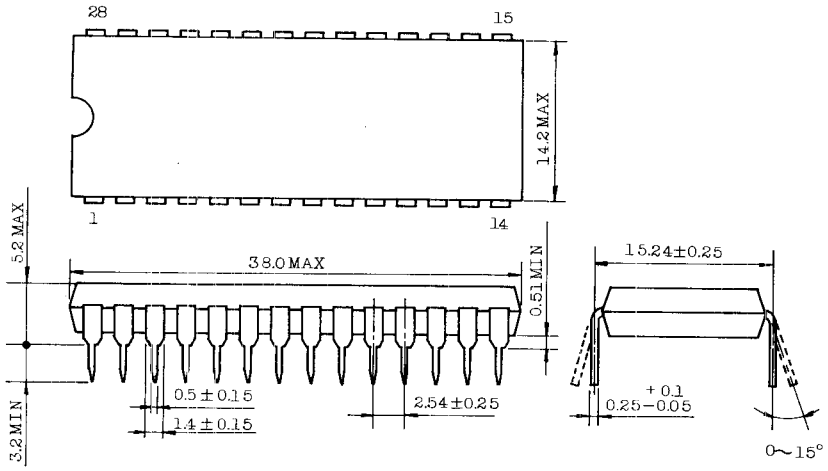

Note : Lead pitch is 2.54 and tolerance is ± 0.25 against theoretical center of each lead that is obtained on the basis of No. 1 and No. 28 leads.

MFP 28 PIN OUTLINE DRAWINGS (F28GA-P)

Unit in mm

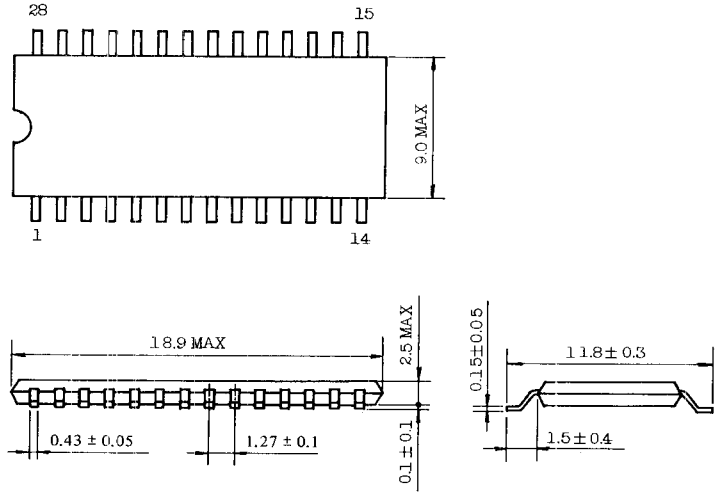

Note : Lead pitch is 1.27 and tolerance is ±0.12 against theoretical center of each lead that is obtained on the basis of No.1 and No.28 leads.

Note : Toshiba does not assume any responsibility for use of any circuitry described ; no circuit patent licenses are implied, and Toshiba reserves the right, at any time without notice, to change said circuitry.
© May, 1986 Toshiba Corporation